fastriers in mechanical drawing.

Service Paper
1949

BOSTON UNIVERSITY
SCHOOL OF EDUCATION

LIBRARY

Ed.
Service Paper
Edmond. H. E.
1949

The Gift of Hubert E. Edmond stored

stored

BOSTON UNIVERSITY
SCHOOL OF EDUCATION

Service Paper

UNIT ORGANIZATION OF THE TOPIC, FASTENERS IN MECHANICAL DRAWING

Submitted by

Hubert E. Edmond
(B. S. in Ed., Fitchburg State Teachers College, 1941)

In partial fulfillment of the requirements for
the degree of Master of Education
1949

Boston University
School of Education
Library

Gift of Hubert E. [illegible]
School of Education
July 29, 1949
31211

First Reader: Roy O. Billett, Professor of Education

Second Reader: Frank L. Steeves, Instructor in Education

TABLE OF CONTENTS

Page

CHAPTER I. ORGANIZATION OF THE UNIT

Purpose of the unit 1

Prevailing conditions 1

Classroom layout 3

Preparation of the classroom for the unit method of teaching 4

Classroom floor plan 5

The test 6

CHAPTER II. A UNIT ON FASTENERS

General statement of the unit 8

Delimitation of the unit 8

Probable indirect learning products 11

The Unit Assignment 12

Introduction 12

Laboratory work 12

Optional related activities 22

Special study-and-activity guides 24

References for pupils' use 51

Test on fasteners 52

CHAPTER III. EVALUATION OF PUPIL GROWTH

Results of teaching "fasteners in mechanical drawing" by the unit method 62

Estimating pupil growth 63

Pupil appraisal of the unit 73

TABLE OF CONTENTS
(Continued)

Page

Teacher appraisal of the unit 74

APPENDIX

Samples of activities submitted by pupils 78

Inquiry form for pupil appraisal of the unit 80

Test answer sheet 81

Samples of drawing score sheet 82

LIST OF TABLES

Table		Page
1.	Educational Record of Twenty-two Boys	2
2.	Initial Score, Final Score, and Gains Made by Each Pupil on Test	65
3.	Calculation of the Mean and Standard Deviation for the Grouped Frequency Distribution of Pre-Test Scores	66
4.	Calculation of the Mean and Standard Deviation for the Grouped Frequency Distribution of Final Test Scores	67
5.	Distribution of Pupil Growth of Pre-Test Scores .	69
6.	Distribution of Pupil Growth of Final Test Scores	70
7.	Total Score on Drawings and Final Test Score of Each Pupil	71

LIST OF FIGURES AND GRAPHS

Page

1. Classroom Floor Plan 5

2. Graph Illustrating Difference in Range of Pre-Test Scores and Final Test Scores 72

CHAPTER I

ORGANIZATION OF THE UNIT

Purpose.--This paper is concerned with the presentation and development of a unit of work in the field of mechanical drawing at the vocational secondary-school level. It is an attempt to apply the basic principles and procedures set forth in the book Fundamentals of Secondary School Teaching[1], and in the course, The Unit Method in the Secondary School offered by Roy O. Billett at Boston University.

Prevailing Conditions.--The unit was planned for a class of twenty-two boys in tenth-grade vocational division.

The chronological ages of the pupils range, as shown in Table 1, from 14 years, 1 month to 16 years, 10 months. Intelligence quotients for all but five were based on the Kuhlmann-Anderson Intelligence Test and ranged from 87 to 128 with a median of 98.25. In scholastic achievement, in terms of first year mechanical drawing marks, the range extends from 69 to 91 with a median of 78. In scholastic achievement, in terms of averages of first year marks in all subjects combined, the range extends from 64 to 86 with a median of 74.

The parents of the majority of the pupils are of native birth. Fourteen parents were born in this country, three in

---

[1]Roy O. Billett, Fundamentals of Secondary School Teaching, Houghton Mifflin Company, Boston, 1940.

Table I. Educational Record of Twenty-two Boys

Pupil	Age	Intelligence Quotient	Mark in Mechanical Drawing I	Scholastic Achievement
(1)	(2)	(3)	(4)	(5)
A	16-10	99	72	70
B	16- 0	94 a	85	74
C	15- 3	94	91	78
D	16- 5	88	86	76
E	15- 2	107	77	75
F	14- 1	99	85	73
G	15- 8	106 b	84	74
H	15-10	108	76	70
I	15- 0	103 a	73	73
J	15- 4	106	87	83
K	15- 0	100 a	91	86
L	16- 2	85 b	71	74
M	16- 0	112	80	69
N	16- 0	98	78	75
O		112	--	73
P	15- 0	97	78	77
Q	16- 4	94	78	64
R	15- 2	128	80	82
S	15-10	100	69	70
T	15- 5	98	71	81
U	16- 8	95	73	72
V	16- 6	108	77	74

a Score on Otis Quick-Scoring Mental Ability Test.
b Score on Terman and McNemar Test of Mental Ability.

Canada, three in Italy, and two in Portugal. In three cases the native tongue, Portuguese or Italian, was the only language spoken in the home. In the remaining two cases, both the native and English languages are spoken.

The occupations of the parents are centered around the community's one important industry, fishing. Eleven of the parents are fishermen or fish workers on the wharfs. Four other parents are affiliated with the building trades. Two are enlisted in the United States Navy. One is a dairyman. Another is a gardener. In three cases the father is deceased and the occupational burden is carried on by either the mother or family-in-law.

A majority of the pupils are active in some part-time work. In most cases the work is connected with the fisheries or boat yards. Five of the pupils have listed this part-time work as a future occupational pursuit. Several of the pupils work part-time in the local theater and gasoline stations. All are active in some extra-curricular activity, either at school or in the community along with this part-time work. The Y.M.C.A. and C.Y.O. organizations have a great influence upon the pupils' out-of-school activities. Four of the pupils are active in school sports. Three different school clubs are represented in the total group.

Classroom Layout.--The mechanical drawing room has thirty permanently fixed drawing tables and stools. They are arranged in five rows, six tables to a row as shown in Figure 1, page 5. The north wall is practically all permanently attached

blackboard, except for a door entrance to a large supply room. Above the blackboard is a roll-up screen for visual aids. The east wall has a long blackboard plus a small wash stand and lower cabinets for storing classroom drawing boards. The south wall is made up of a large, long bulletin board. Again, beneath the bulletin board are cabinets for storing drawing boards. The west wall is made up of banks of large windows that give ample light for drawing. In front of the five rows of drawing tables is the teacher's desk, a large drafting table and a file and work table. These three pieces of furniture are moveable.

Preparation of the Classroom for the Unit Method of Teaching.--Because of the original fixed position of the drawing tables, not many physical changes were used to benefit the teaching of the unit. Certain customs for using the large drafting table and work table were changed so working exhibits and displays could be arranged for the benefit of all classes. A large sheet of burlap type of material, borrowed from the art department, was attached over the blackboard on the east wall. Small commercial art hangers were attached to the display material and pinned on the sheet. This prepared bulletin board plus the bulletin board on the south wall gave a total of 120 square feet of display area.

Three shelves of the classroom bookcase were reorganized to store needed class material. One shelf contained all the reference books. Another shelf held extra special study-and-activity guides, pamphlets and magazines. The third shelf contained samples of common or special fasteners, small machine

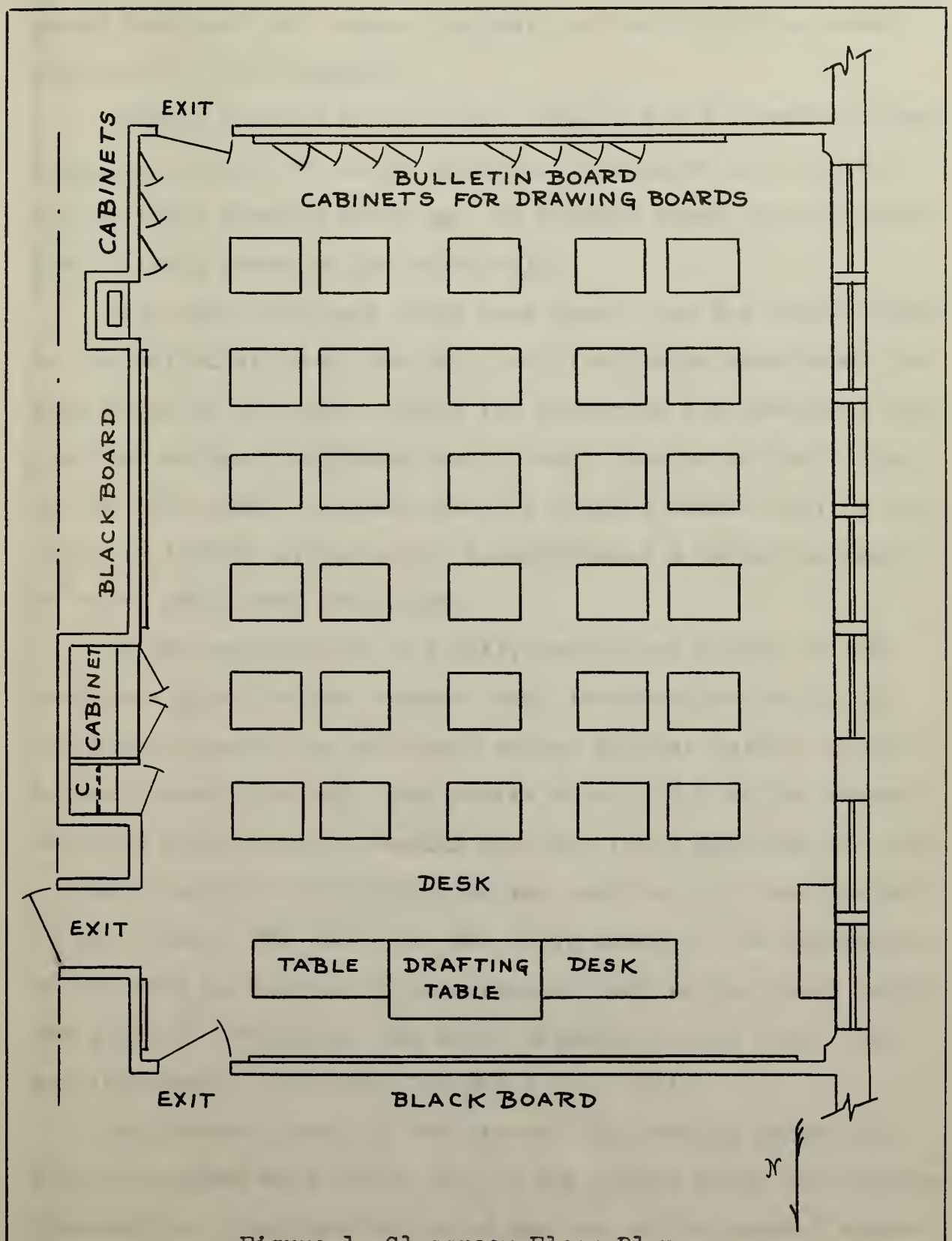

Figure 1 Classroom Floor Plan

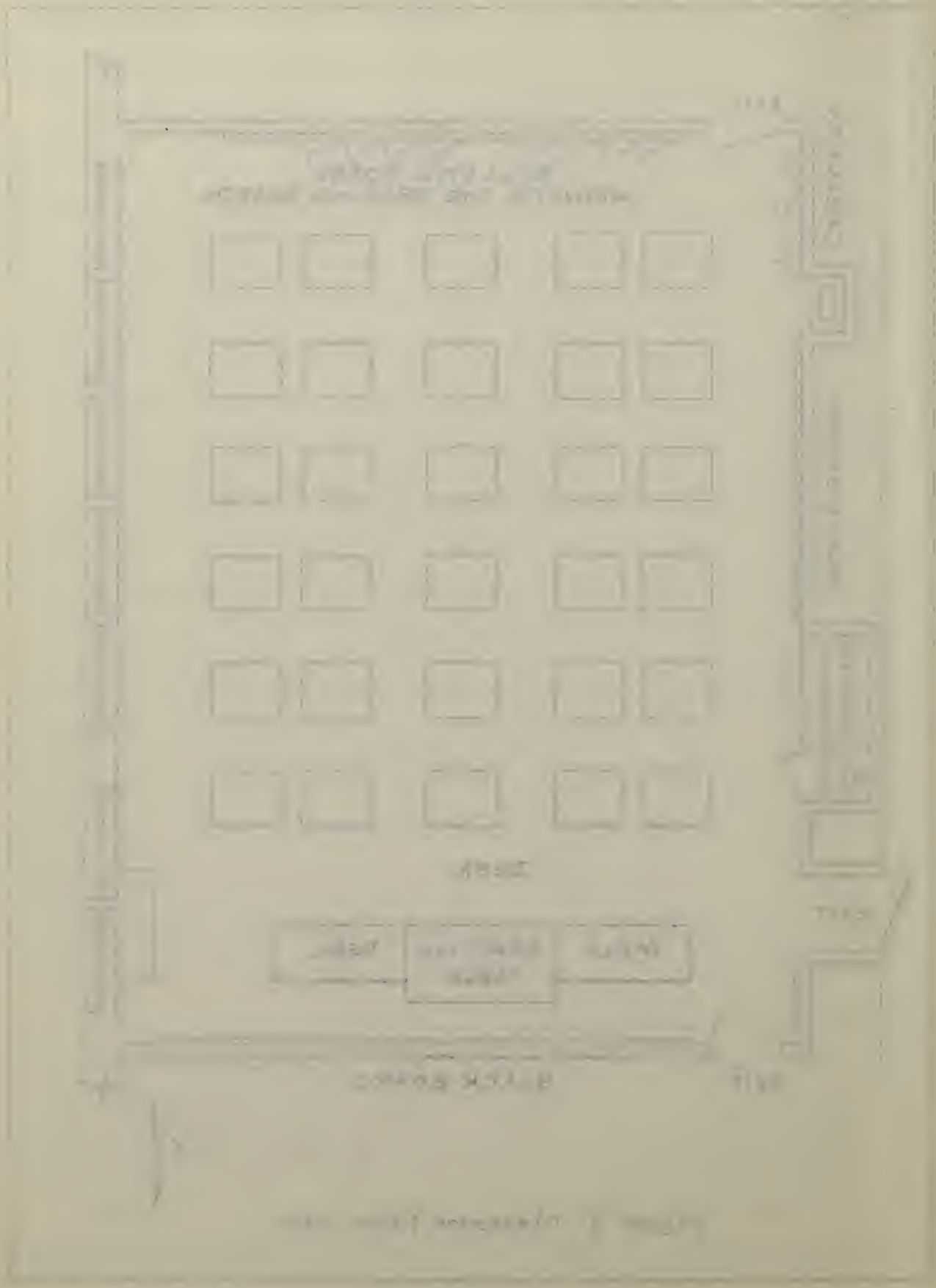

parts that used the common fasteners and small working models collected by the students.

Pupils' written assignments, completed and corrected drawings, were placed in large individual envelopes and stored on top of their drawing boards in the drawing board closets under the bulletin board on the south wall.

Test.--All the test items were based upon the items listed in the delimitation of the unit and distributed throughout the five parts of the test. Space for answering the questions was provided on the right-hand side of each item or at the bottom of the test page. In each case the student needed only to encircle a letter, write within a parentheses a letter or number, or write out a word or phrase.

At the beginning of the unit, duplicated copies of the test were given to the students with instructions to fill in the answer spaces, as mentioned above, whether certain of the correct answers or not. The pupils were told that the scores obtained would have no bearing upon the final mark for the unit. A single period of fifty minutes was used to give the pre-test to the class. The same test was given again at the completion of the unit to measure the achievement made by the class during the study of the unit. The score obtained on the final test was included in the grade for the entire unit.

Duplicated copies of the general and special study-and-activity guides were handed out to the pupils after the pre-test examination. Instructions as to the use of the special study-and-activity guide booklet were talked over with the class.

This included how to recognize and identify reference material, the drawing plate number, and plan the layout and solution of each special study-and-activity guide problem.

CHAPTER II

A UNIT ON FASTENERS

General Statement of the Unit.[1]--In the practical application of the graphic language in making working drawings, there occurs the necessity for representing the methods for fastening parts together, either with permanent fasteners, such as rivets, or with removable ones, such as bolts, nuts, studs, screws and keys. The pupil must know the fundamental forms of these fastening parts and be thoroughly familiar with the conventional method of their representation and application.

Delimitation of the Unit.[2]

1. The earliest known screw was developed in the late middle ages from hand-formed threads on a bolt and hand-formed nuts fitting just that one bolt.
2. The early development of the United States Thread, 1864, by William Sellers in this country lead to the standardization of screw threads by an Act of Congress in 1918.
3. A triangular piece of paper, wrapped around a cylindrical object such as a pencil, will give the actual path of the screw thread around the bolt. This curve is called a helix.
4. On the profile of an American Standard Thread, (a) the top edge of the thread is called the crest and the bottom or

---

[1]Ibid., p. 505.

[2]Roy O. Billett, loc. cit.

groove, the root, (b) the diameter is measured from the outside point of the thread to the outside point on the other side, (c) the distance from one crest to the next crest is the pitch, (d) the inside diameter is the distance from root to root.

5. The American National Thread is divided into three series: (a) National Coarse Series, (b) National Fine Series, (c) Extra Fine S.A.E. Series.
6. The American Standard thread is divided into four general fit classifications: (a) Loose fit, (b) Free fit, (c) Medium fit, (d) Very close fit.
7. Screw threads cut on the outside surface of a cylindrical object, such as those on a bolt, are called external threads. Threads cut on the inside of an object, such as a nut, are called internal threads.
8. Square and Acme threads are used to transmit power and strength.
9. A right-hand thread requires that either the bolt head or the nut be turned to the right or clockwise direction, while left-hand threads must turn to the left or counter-clockwise.
10. The pupil should possess an understanding of internal and external (regular and simplified forms) thread symbols in such cases as (a) on a bolt, (b) a through tapped hole, (c) a tapped hole, tap drill showing, or (d) a tapped hole, tap drill not showing, and applied to either a sectioned or full drawing.

11. The pupil should possess and understand the meaning of thread specifications as written on a blueprint so he can specify the correct information as it applies to his drawing. Example: 1/4" - 20 NC-2.
12. The pupil should possess the ability to draw a simple screw thread in either regular or simplified symbol form.
13. The pupil should possess an understanding of the American Standard Bolt and Nut series (regular, heavy, light) and the classes of finishes (unfinished, semi-finished, finished) that are listed in commercial stock.
14. The pupil should possess the ability to read and apply the information listed on the American Standard Bolt and Nut measurement chart for draftsmen. (See Special Study-and-Activity Guide No. 5.)
15. The pupil should possess the ability to draw a simple bolt and nut showing (a) a hexagon or square bolt head and nut on its flats or corners, (b) the thickness of bolt head and nut, and (c) the correct radius for bolt head and nut faces.
16. The pupil should possess an understanding of bolt specifications as written on blueprints so he can specify the correct information as it applies to his drawing. Example: 5/8" x 2" Semifin. Hex. Hd. Bolt 5/8" 18 NF-2.
17. American Standard screws are divided into three types: (a) Cap Screws are used for fastening two pieces together by passing through one and screwing into the other. (b) Machine Screws are used for fastening two pieces of metal together, by passing the screw through a drilled hole in one

piece and screwing it into a tapped hole in a second piece. (c) Set Screws are used for holding two parts in a desired position relative to each other by screwing through a threaded hole in one piece and bearing against the other.

18. The pupil should possess an understanding of the three general types of keys: (a) Gib, (b) Square, (c) Woodruff, and when and where each may be so used.
19. The purpose of a key is to prevent the relative motion between two parts of a machine in a radial direction, such as the motion of a wheel on a shaft.
20. A stud bolt or stud is a cylindrical bar having threads on both ends.
21. The pupil should possess an understanding of hot and cold rivets, the forms of heads and shanks they come stocked in, and method of placement on drawn work.

Indirect Learning Products.[1]

A. To develop an understanding that drawing may be used to create ideas, record ideas, and transfer these ideas to others.
B. To develop an understanding of the importance of drawing as a basic need for his growth in the many general and specific trade occupations.

---

[1]Ibid., p. 506.

The Unit Assignment (Tentative time allotment seven weeks)

A. Introduction.--Lecture, discussion and demonstration.

1. Exhibit of common machine parts, large and small showing, as nearly as possible, all the common types of fasteners used in industry.
2. Exhibit also included random samples of machine screws, rivets, studs, bolts, nuts. Some of these are adaptable to use on the machine parts.
3. Following sample questions discussed: (a) Why are nuts and bolts used on some parts and only machine screws on others? (b) What is the difference between a stud and a bolt and when and why would you use it? (c) Why use such fancy keys to hold on the pulley when we could use a set screw?
4. Have each boy bring in a sample nut and bolt from home or school shop like the many shown in the exhibit.

B. Laboratory work

1. Teacher demonstrate and discuss: (a) what pitch is, (b) what we mean by single pitch, double pitch, triple pitch, (c) what the crest is, (d) the root of a thread, (e) what the inside and outside diameter is called.

*2. Make a cardboard triangle that will show what a thread looks like around a round object like a

---

*All items marked with asterisks appear on the duplicated study-and-activity guides, a copy of which is given each pupil.

pencil. What is the curve around the pencil called? What is the pitch? (1:78-79)[1]

*3. The American Standard V sharp thread is divided into several classes. What are the classes? Why do they have different classes? What is the difference between each? (2:103-104 8:129)

*4. Another American Standard Thread series is called the S.A.E. group. What does S.A.E. mean? What difference is there between S.A.E. and the American Standard thread? When and where would you use S.A.E. threaded bolts? What other important facts can you give concerning S.A.E. standardization? (1:81 8:127-129 2:103)

*5. How would you show the following pitch threads on a one inch outside diameter rod: (a) single pitch, (b) double pitch, (c) triple pitch. (1:79-80 8:131) For Plate No. 201[2] make a drawing showing the three kinds of pitch. (See Special Study-and-Activity Guide No. 1[3] for suggestions.

*6. We sometimes say a fastener has external threads or internal threads. Can you give an example of each? What is the meaning of the two words?

---

[1]Reference number 1, page 78 to 79, of the reading list that follows the unit assignment.

[2]The pupil will place this plate number on his classroom drawing.

[3]A special study-and-activity guide is shown following the optional related activities.

*7. If I had to screw a nut on a standard bolt thread, which direction would I turn it? Which direction in relation to a clock? What if the thread was left-handed, how would I turn the nut in relation to direction and clock face? (5:48)

8. The teacher will discuss and demonstrate the following points: (a) the regular and simplified forms of external thread symbols and an understanding of drawing methods and simple rules to follow on sizes of lines in symbol, (b) the regular and simplified forms of internal thread symbols as applied to through tapped hole, tapped hole, tap drill showing, and tapped hole, tap drill not showing.

*9. Make a drawing of external threads and thread symbols covering: (a) a single pitch American Standard thread in section, (b) a regular thread symbol, (c) a simplified thread symbol. When would you use each of these types of thread symbols in your design work? See Special Study-and-Activity Guide No. 2 for suggested sizes and layout. Plate No. 202.

10. The teacher will demonstrate and discuss the use and interpretation of thread specifications on drawings. Example: 1/4" 20 NC-2.

(a) 1/4 - diameter of bolt.
(b) 20 - number of threads per inch.

(c) NC - series of thread.
(d) 2 - Class fit of thread.

*11. How would I make a drawing of internal thread symbols showing: (a) a tapped through hole, (b) a tapped hole, tap drill showing, (c) a tapped hole, tap drill not showing? Make two view sketches of each of the above examples; one as a sectional view, the other a full view. (See Special Study-and-Activity Guide No. 3 for suggestions). What is the rule for finding Y, for finding X. (5:53)

*12. Make a drawing of internal thread symbols as suggested in Special Study-and-Activity Guide No. 4. Plate No. 203.

*13. A bolt with American Standard thread has a "free fit" on the nut. What does that mean? Are there other types of fits? How do they class fits if there are such things? Name at least one example of the various classes. (2:104 1:82)

*14. Take a thread specification from ideas suggested in class discussion. What number represents the diameter of the bolt, the thread series, class fit, and the number of threads per inch? What view on the drawing would you place the thread specification? How would you show several holes of the same size on your drawing? (1:82)

15. The teacher will discuss the American Standard

bolt and nut with the class. Introduce the nut and bolt chart showing the various series and finishes that they come stocked in, and how they are listed on standard charts. Study the various columns headed: (a) hexagon and flat bolt heads and nuts, (b) distance across flats, (c) thickness of bolt head and nut, and (d) sizes of bolts. Give example of bolt and follow it through the necessary steps.

*16. Write out five examples of various combinations of American Standard bolts based on the class discussion. When would I use a regular bolt, a heavy bolt, a light bolt? Why should we care if the bolt is one finish over another? (1:83-84 10:159-161)

*17. Make several sketches of a hexagon bolt head and nut, the hexagon head set on the flats and another the hexagon head set on the corners. What do we mean by the terms "flats" and "corners" when talk-about nut and bolt heads? What difference, if there is any, between the thickness of a bolt head and nut? What dimensions are needed to really start reading an American Standard nut and bolt chart? (See Special Study-and-Activity Guide No. 5). (1:84-86 10:159-162)

*18. Make a drawing of an American Standard bolt in the following ways: (a) a hexagon bolt head and

nut, the head and nut set on the "flats", (b) a hexagon bolt head and nut, the head and nut set on the "corners", (c) a square bolt head and nut set on the "flats", (d) a square bolt head and nut, the head and nut set on the "corners". (See Special Study-and-Activity Guide No. 6 for suggestions). Plate No. 204. Be sure to use thread symbols showing external threads only.

*19. Take a bolt specification like 5/8" x 2" Semifin., Hex. Hd. Bolt 5/8" 18 NF-3 and give all the information you can about it. How would you place it on your drawing? What is the line drawn from the specification to bolt called? Write the specification on one of your past drawings. What if the object was a stud instead of a bolt? How would the specification differ? (2:108)

*20. Make a drawing showing American Standard bolt as: (a) a through hexagon bolt and nut joining two pieces of heavy steel plate, (b) a through square bolt and nut joining two pieces of heavy steel plate. (See Special Study-and-Activity Guide No. 7 for suggestions). Plate No. 205.

*21. Make a drawing showing a standard square headed bolt and nut joining two sectioned pieces of L-shaped steel bars. (See Special Study-and-Activity Guide No. 8 for suggestions). Plate No. 206.

*22. Make a drawing showing a stud bolt and hexagon nut joining a section of a recessed cover to a sectioned portion of a base. (See Special Study-and-Activity Guide No. 9 for suggestions). Plate No. 207.

*23. As an extra problem, make a drawing of the Split Coupling as shown in Special Study-and-Activity Guide No. 10. Plate No. 208. How will you show the bolt, nut and thread symbol in the sectioned portion of the split coupling?

*24. American Standard screws are divided into three general groups: (a) Cap Screws, (b) Machine Screws, (c) Set Screws. Make a sketch of each one and list the important differences between each and give an example of when to use each. (2:109 1:87-89 10:164-166)

*25. Make a drawing showing the use of the Button-head Cap Screw. See Special Study-and-Activity Guides No. 11 and 12 for a better understanding of common sizes and head shapes. In your drawing show how you would attach a steel plate to another piece of steel. (See Special Study-and-Activity Guide No. 13 for suggestions). Plate No. 209.

*26. Make a drawing showing the use of a Countersunk Machine Screw. See Special Study-and-Activity Guides No. 14 and 15 for a picture of common

machine screw head shapes and body dimensions. Can you list two differences between machine screws and cap screws when comparing the two special study-and-activity guides? In your drawing show how you would attach a steel plate to another block of steel. (See Special Study-and-Activity Guide No. 16 for suggestions). Plate No. 210.

*27. Make a drawing showing an American Standard Hexagon headed Cap Screw attaching a large L-shaped iron casting to a solid base. (See Special Study-and-Activity Guide No. 17 for suggestions). Plate No. 211.

*28. For Plate No. 212 show a Fillister head Machine Screw joining a steel plate to a solid steel block. (See Special Study-and-Activity Guide No. 18 for suggestions). What does "counterbore" mean?

*29. Under what conditions would I use a set screw? What types of heads and points are there? What is a safety set screw? Do we measure the length of a set screw the same as a standard bolt? (6:87 1:89)

*30. Make a drawing of a square headed set screw holding a circular plate to a shaft. (See Special Study-and-Activity Guide No. 19 for suggestions). Plate No. 213.

*31. Make several sketches of the common keys that are used in industry today. What are the names of three keys? When is one used instead of the other? Why have so many different types? Could I use a set screw instead of a key to attach a pulley to a shaft? (1:91 2:113 8:139)

*32. Make a drawing showing a Hub attached to a Shaft by means of a square key. Use Special Study-and-Activity Guide No. 20 for key and key seat sizes. (See Special Study-and-Activity Guide No. 21 for suggestions). Plate No. 214.

*33. As an extra problem, make a drawing showing a Hub attached to a Shaft by means of a Woodruff Key. See Special Study-and-Activity Guide No. 22. Plate No. 215. What would be the dimension of a No. 810 Woodruff Key?

*34. What do we mean when we speak of a cold rivet and a hot rivet. Explain. When would you use each? Can you list three common groups of rivets? What group would you use in making a tin box? What type of rivet is used in steel bridge construction? (1:91-92 10:169-172)

*35. Make a drawing of an assembled tool box using 1/8" flat head rivets. See Special Study-and-Activity Guide No. 23. Plate No. 216.

*36. Make a drawing of a machine stuffing box using four studs and hexagon nuts. (See Special

Study-and-Activity Guide No. 24 for suggestions). Plate No. 217.

*37. Make a drawing of a Bearing Plate using: (a) 4 - 1/2" x 1-3/8" Hex. Capscrews, (b) 2 - 1/4" x 5/8" Sq. headed Set screws. See Special Study-and-Activity Guide No. 25. Plate No. 218.

*38. Make a drawing of the Stuffing Box and Gland using: (a) 6 - 1/2" x 1-1/4" Hex. Cap Screws, (b) 2 - 5/8" x 3-1/4" studs and Hex. nuts. See Special Study-and-Activity Guide No. 26. Plate No. 219.

*39. Develop a story of the screw. The class will be divided into groups, and each group will study one part of the story and prepare to report your findings to the class. Which of the following parts of the story would you like to study: (a) Special types of screws, (b) Early history of the screw, (c) Modern development of the screw, (d) Methods of manufacture in industry, (e) Use of the screw in industry and home.

*40. If you do not care to join one of the five groups just named, you may serve with a group of pupils who will prepare an exhibit of screws. See the teacher about this.

*41. After the six groups mentioned above have been formed, each group should elect a chairman. Each group will make suggestions from time to

time to the exhibit group, and one member of each group should be appointed, by the group, to report to the class later on.

C. Optional related activities

1. From your shop work, make up an exhibit or wall chart showing various types of bolts and nuts you use every day.
2. Make up an exhibit of all types of fasteners you use in your shop class or are used there to do your work.
3. Visit the hardware store and see how they sell the types of fasteners you have been studying about. Make a full report to the class.
4. Make a list of situations where they use the fasteners in your shop classes. Example - in the machine shop, the automotive shop, sheet-metal shop, etc.
5. Make a collection of articles that show the use of a single pitch thread, double pitch thread, triple pitch thread. Example - What pitch thread does a fountain pen have?
6. Write a report on the various types of threads made commercially in this country and in foreign countries. Show how each is used and why they are that particular way.
7. Make up an exhibit of the class fits that we

have for nuts and bolts in commercial use.

8. Prepare a demonstration on tapping a hole for a standard bolt. Cover the method of pre-drilling, the tap sizes and uses, method of tapping, and how the bolt fits the hole.
9. From some commercial blueprints, prepare an oral report on the use and meaning of thread specifications on bolts, nuts and screws.
10. Make a collection of American Standard bolts and nuts showing heavy, light, regular bolts and the three types of finishes. Add to the collection actual machine parts where that type of bolt is used or pictures of their use on machines.
11. Make a collection of American Standard screws. Show the three types and of each various types of heads that are sold commercially. Try to have an example of where you would use each.
12. Make a collection of pictures showing the process of making screws. Mount them in a notebook for table exhibit or on a board for bulletin-board exhibit.

Drawing Layout. American Standard Threads. Plate No. [illegible]

Single Pitch

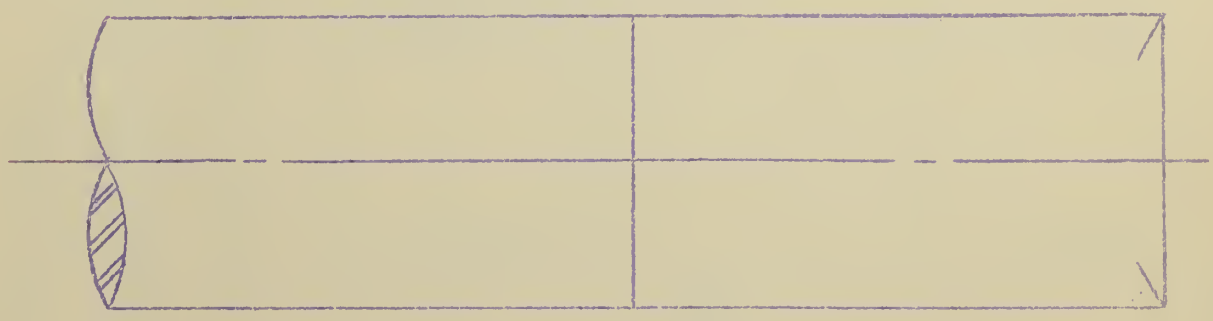

Double Pitch

Triple Pitch

1. Place drawing paper vertically on your drawing board.

2. Layout, as pictured above, three evenly spaced round rods. On the end of the top rod, draw a single pitch V thread, eight threads per inch.

3. On the end of the middle rod, draw a double pitch V thread, four threads per inch.

4. On the end of the bottom rod, draw a triple pitch V thread, four threads per inch.

SPECIAL STUDY AND ACTIVITY GUIDE NO. 2

Drawing Layout: External Thread Symbols. Plate No. 202

1. Place drawing paper vertically on your drawing board.

2. Pictured below are four samples, A.B.C.D., of representing external threads. The regular method of indicating external thread symbols is shown in the top drawings. The simplified method is shown in the two lower drawings.

3. Make a drawing showing at least three of the four external thread symbols.

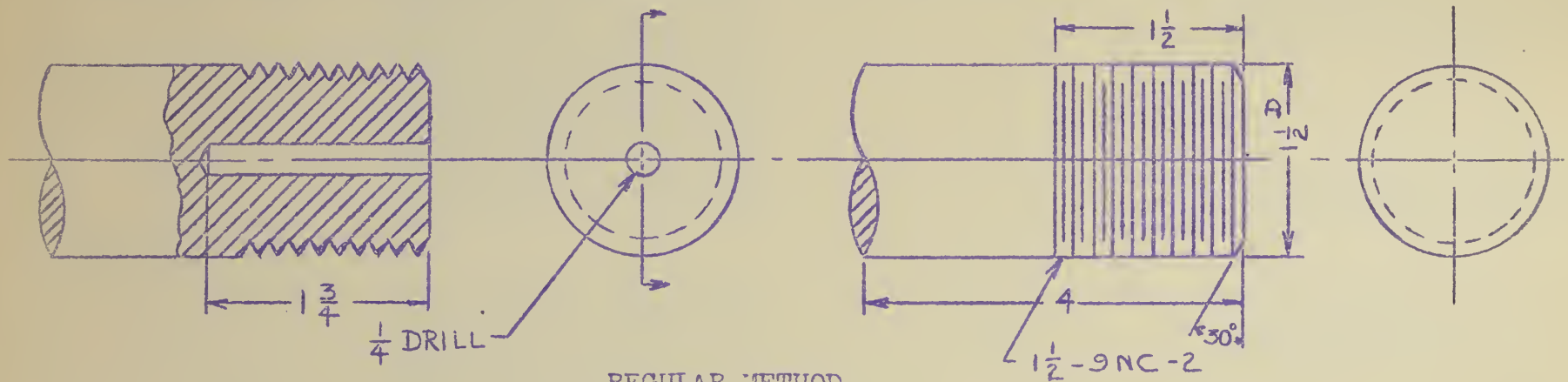

REGULAR METHOD

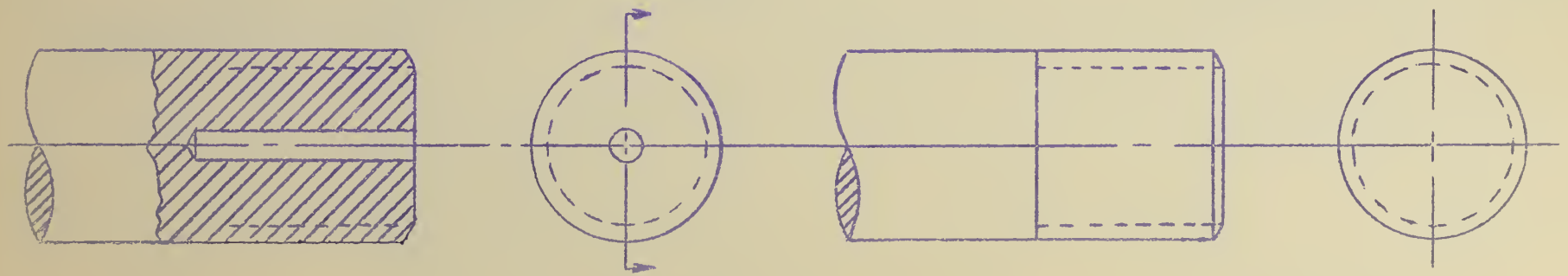

SIMPLIFIED METHOD

Adapted from Edward Berg, Mechanical Drawing, Book II, Milwaukee: Bruce Publishing Company, 1942, p. 54.

25 #1

SPECIAL STUDY AND ACTIVITY GUIDE NO. 3 (supplement)

1. Indicated below are nine different ways a common internal thread may be drawn.

2. Column I indicates the correct end view. Column II, III indicates the regular symbol. Column IV indicates the simplified symbol. Note that some are drawn as a sectional view, the others as full views. What row indicates a tapped hole, tap drill not showing, tap drill showing, and a through tapped hole? (5:54)

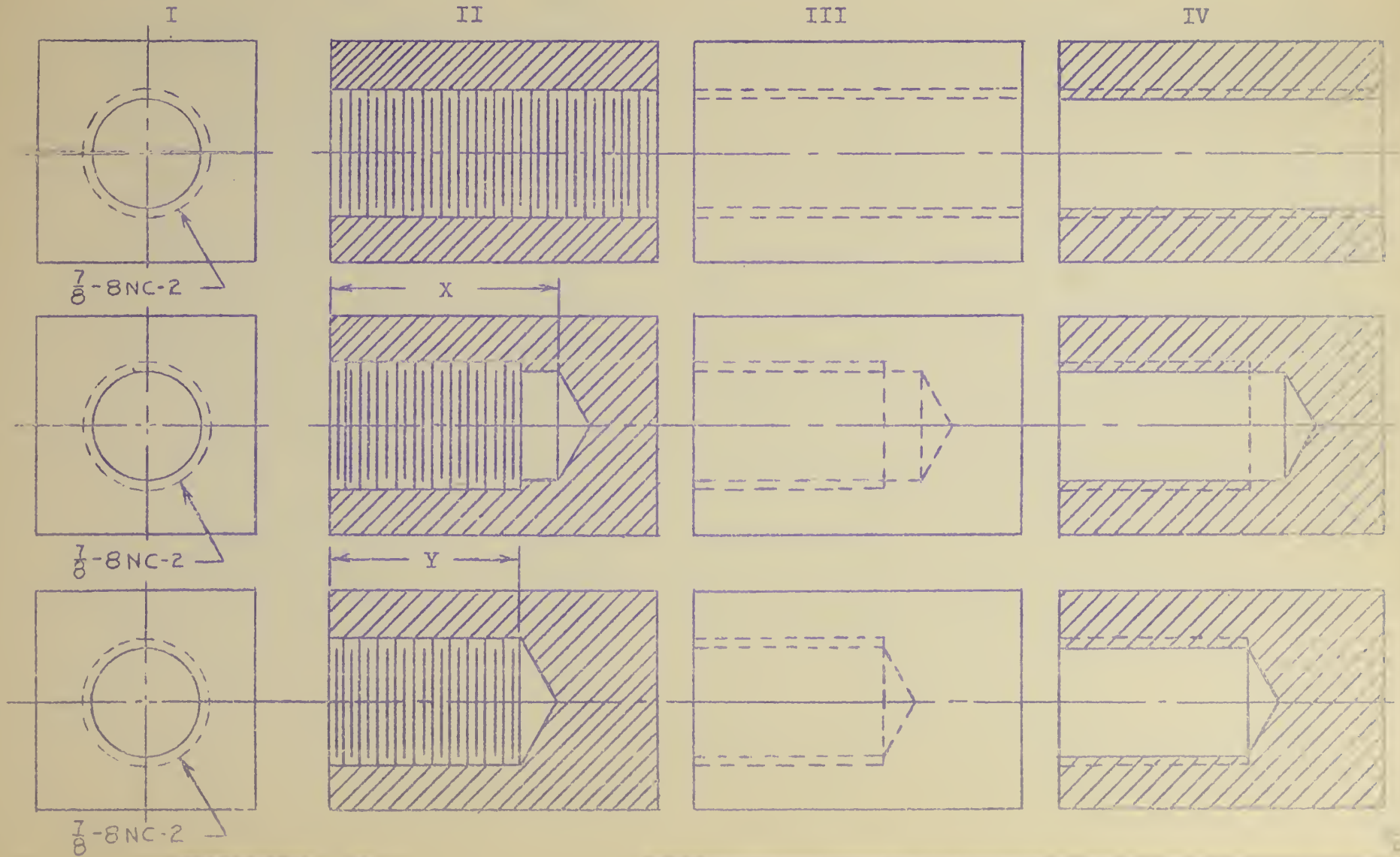

SPECIAL STUDY AND ACTIVITY GUIDE NO. 4

Drawing Layout : Internal Thread Symbols. Plate No. 203

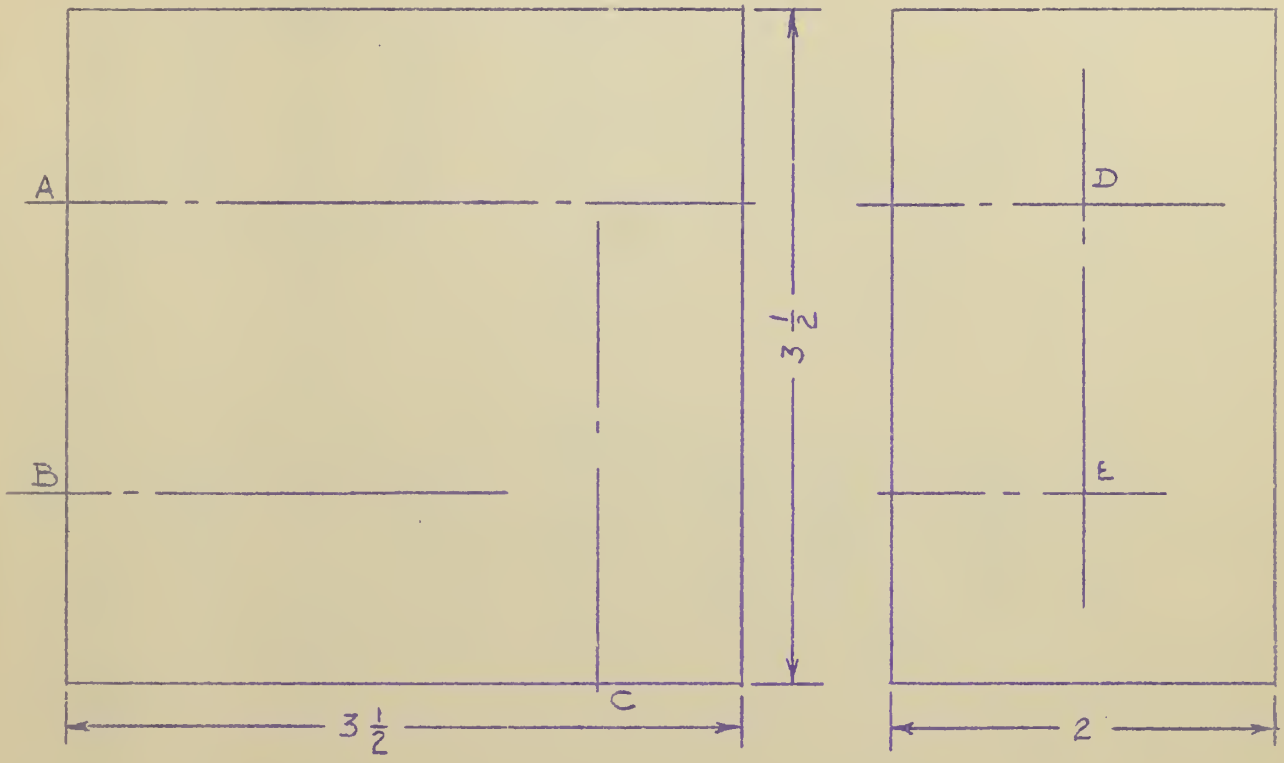

The above is a sample way in which you can show: (a) a through tapped hole, (b) a tapped hole, tap drill showing, (c) a tapped hole, tap drill not showing, in a block of cast iron. The front view is at the left. The side view is at the right.

1. Place drawing paper vertically on your drawing board.

2. You will make two layouts of the above two view block, One block can be placed in the top half of the paper, and the other in the lower half or where these instructions are. The top drawing will be a full view. The lower drawing a sectional view.

3. On centerline A show a through tapped hole. The end view will be placed at D.

4. On centerline B show a tapped hole, tap drill showing. The end view will be placed at E.

5. On centerline C show a tapped hole, tap drill not showing.

HE

SPECIAL STUDY AND ACTIVITY GUIDE NO. 5 (supplement)

AMERICAN STANDARD BOLT AND NUT CHART

1. Look along the top line of the chart, below, until you come to your bolt size. Follow that bolt diameter column down to find the W, H, and T of the bolt and nut.

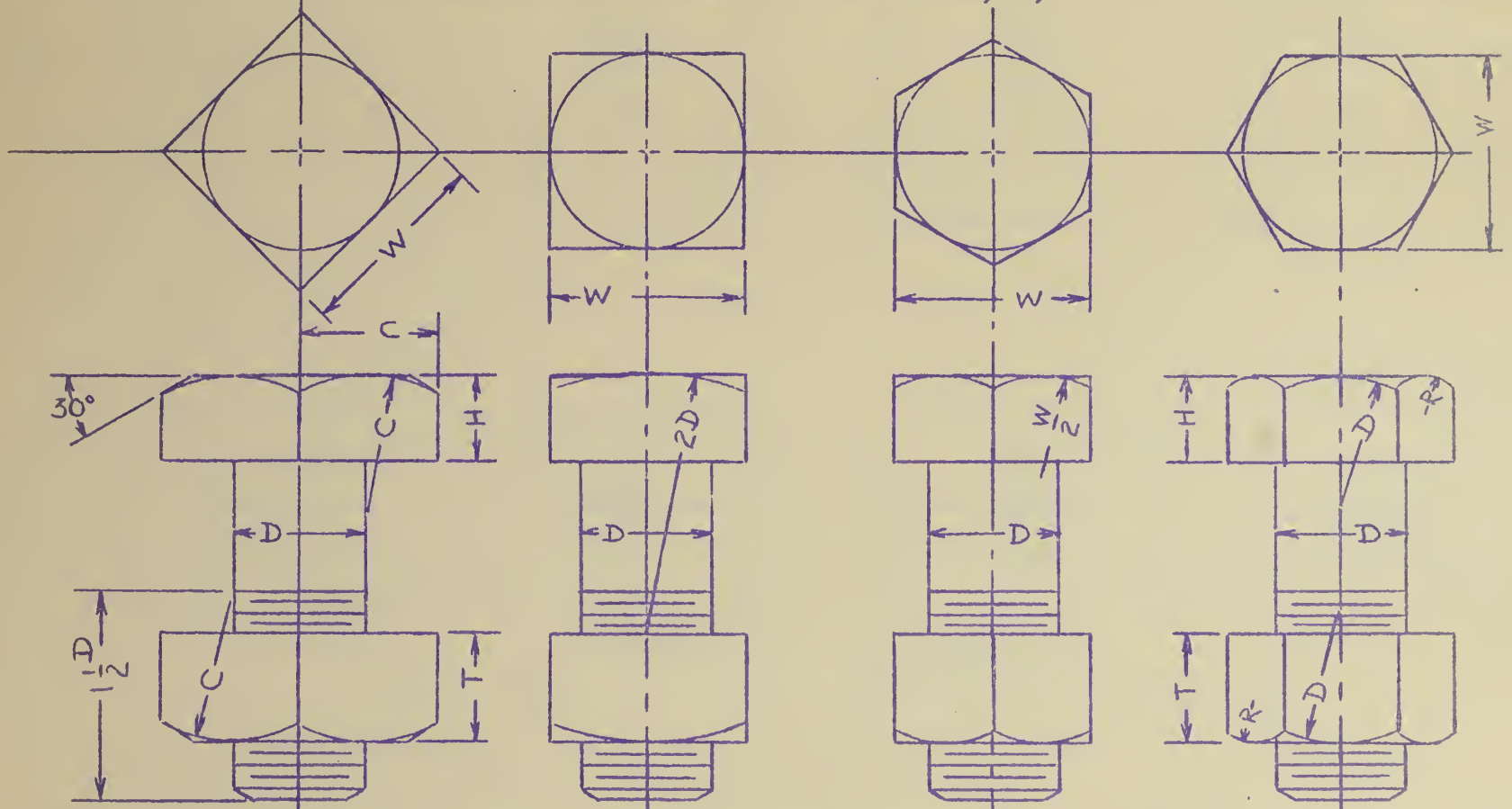

Square Head and Nut Across Corners | Square Head and Nut Across Flats | Hexagon Head and Nut Across Flats | Hexagon Head and Nut Across Corners

D-Diameter of Bolt	1/4	5/16	3/8	7/16	1/2	9/16	5/8	3/4	7/8	1
W-Width across flats	3/8	1/2	9/16	5/8	3/4	7/8	15/16	1-1/8	1-5/16	1-1/2
H-Height of head	11/64	13/64	1/4	19/64	21/64	3/8	27/64	1/2	19/32	21/32
T-Thickness of nut	7/32	17/64	21/64	3/8	7/16	1/2	35/64	21/32	49/64	7/8

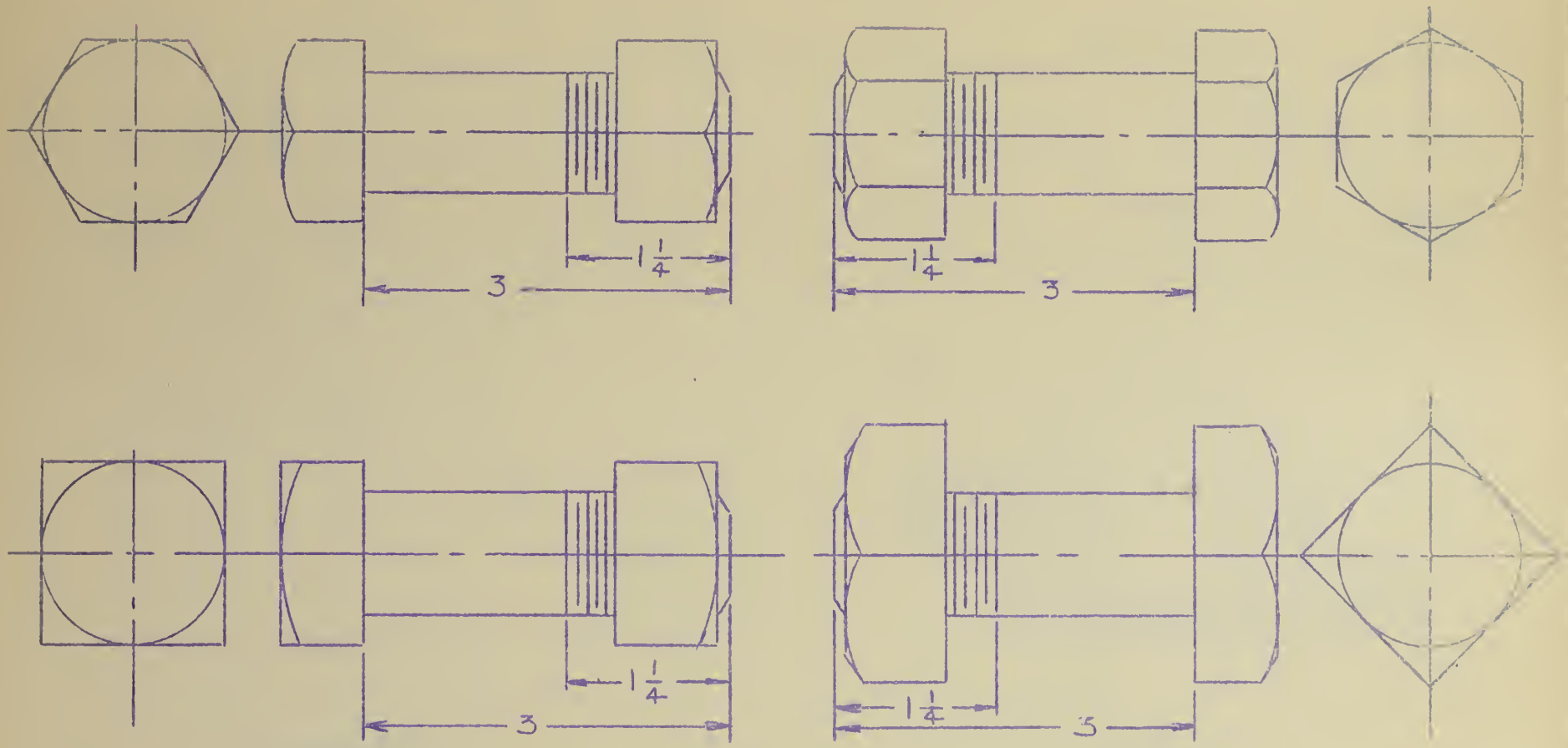

Drawing Layout : American Standard Bolt and Nut Plate No. 204

1. Place a 12x15 paper horizontally on your board.

2. In the upper half of the paper draw a hexagon head bolt and nut on its flats and on its corners. In the lower half of the paper, draw a square head bolt and nut on its flats and on its corners. Be sure to make each bolt a different diameter.

Adapted from Thomas E. French and Carl L. Svensen, Mechanical Drawing, New York: McGraw-Hill Book Company, 1940, p. 230.

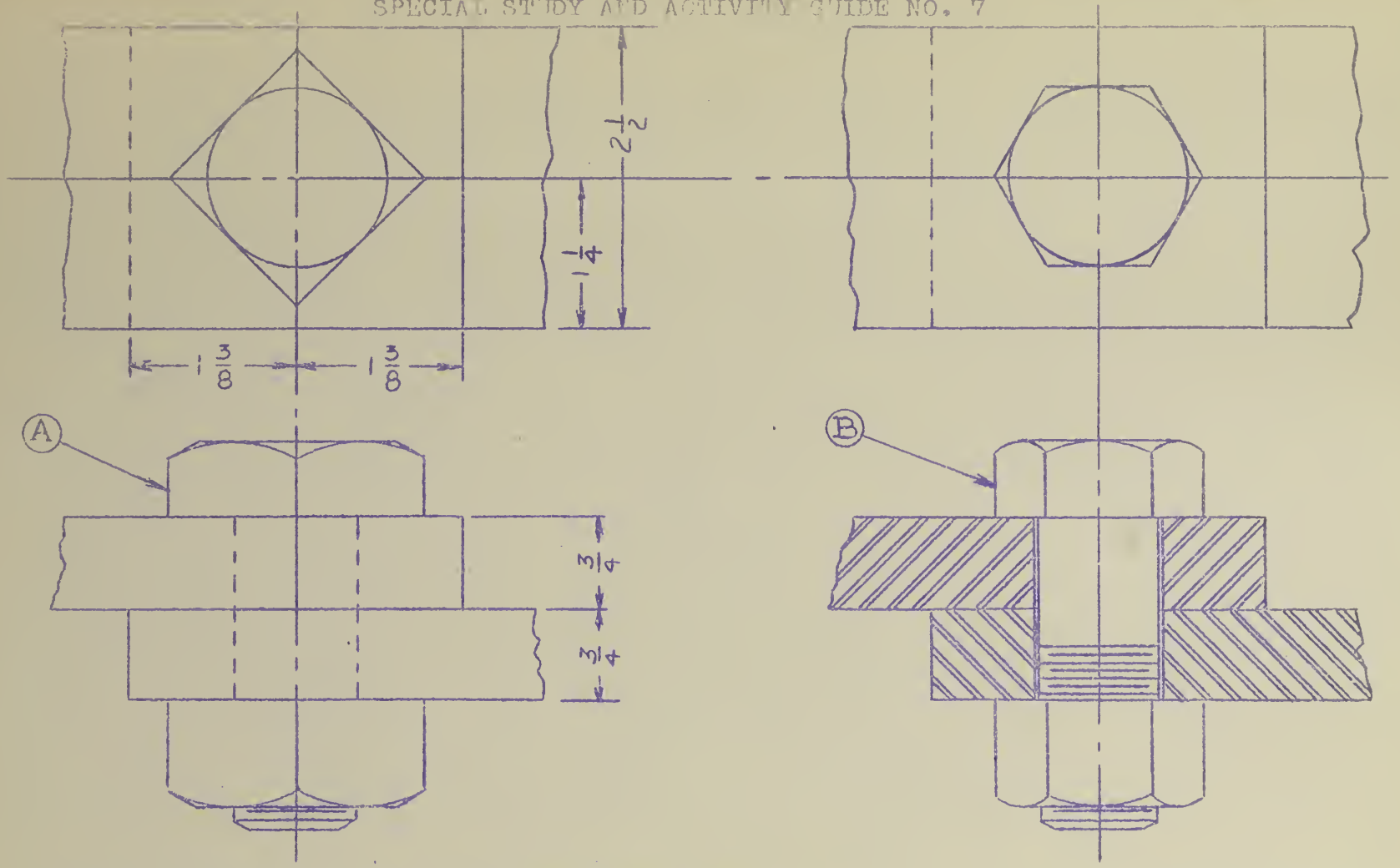

Drawing Layout for the use of Machine Bolts.

Plate No. 205

1. At A, show a 5/8"x 2½" Square Head Bolt and Nut joining the two steel plates. At B, show a 7/8"x 2½" Hexagon Head Bolt and Nut joining two sectioned steel plates.

2. Use the American Standard Bolt and Nut Chart to find the bolt dimensions.

Adapted from Edward Berg, Mechanical Drawing, Book II, Milwaukee: Bruce Publishing Company, 1942, p. 59.

SPECIAL STUDY AND ACTIVITY GUIDE NO. 8

Drawing Layout for Machine Part. Plate No. 206

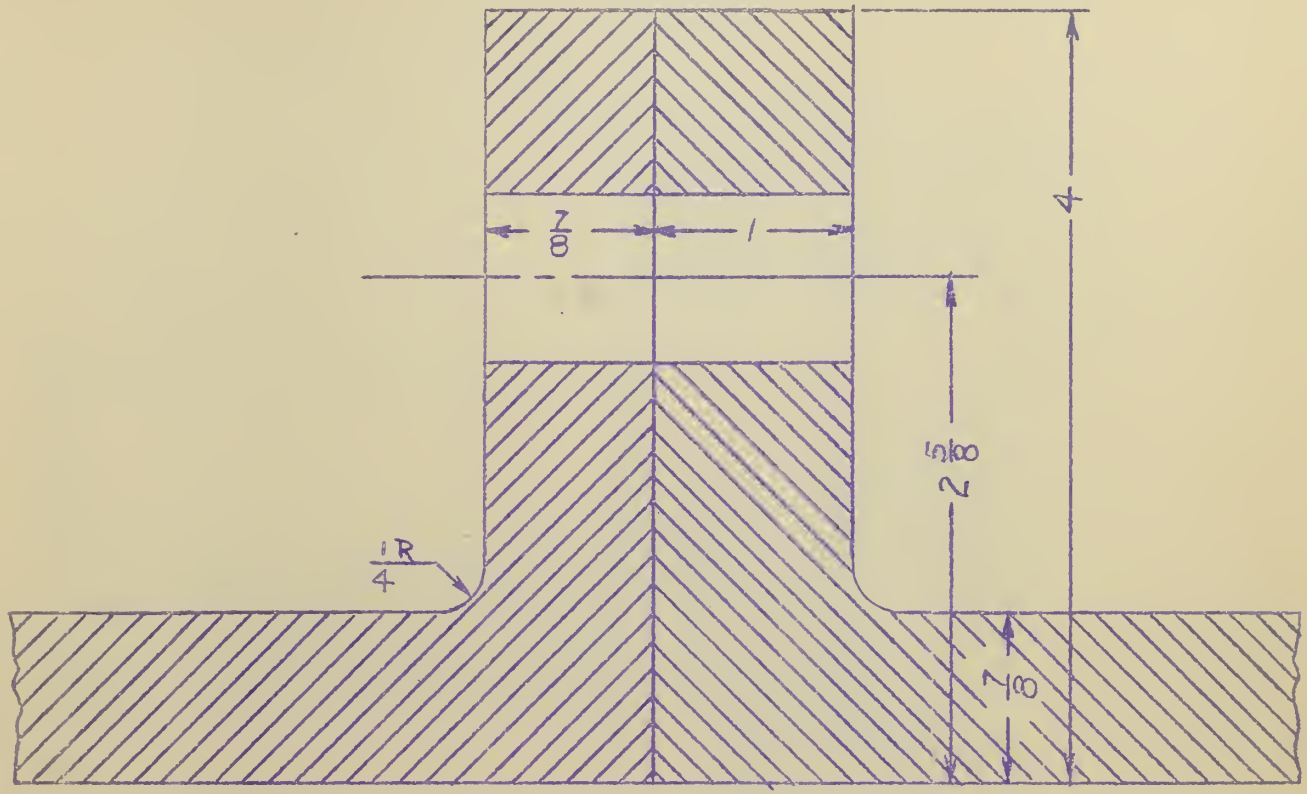

1. Place paper horizontally on your drawing board.
2. Use the above sectioned view as the Front view of your drawing. Make up the necessary side view.
3. Join the two L-shaped pieces of metal with a square head bolt and nut.
4. Pick any size square head bolt and nut for the problem. Refer to the American Standard Bolt and Nut Chart.

Adapted from Carl L. Svensen, Drafting for Engineers, New York: D. Van Nostrand Company, 1935, p. 426.

SPECIAL STUDY AND ACTIVITY GUIDE NO. 9

Drawing Layout for Stud Bolt. Plate No. 207

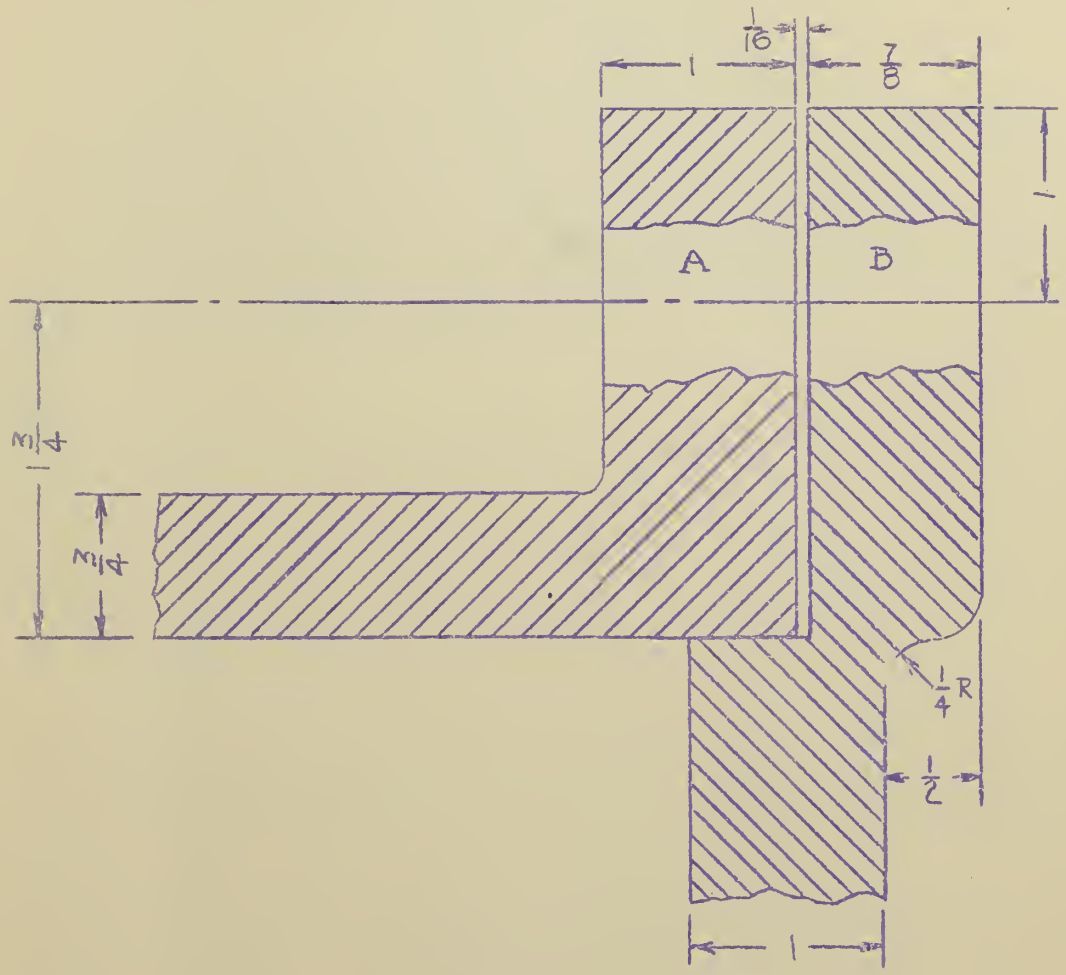

1. Place paper horizontally on your drawing board

2. Use the above sectioned view as the Front view of your drawing. You must develop, any shape and size, a right Side view.

3. Have one end of the Stud Bolt tap into position A. On the other end of the Stud Bolt, passing through section B, place a hexagon nut.

4. Make the Stud Bolt 5/8" in diameter. What diameter will the hole be at B?

Adapted from Leon M. Sahag, Engineering Drawing, New York: The Ronald Press Company, 1942, p. 333.

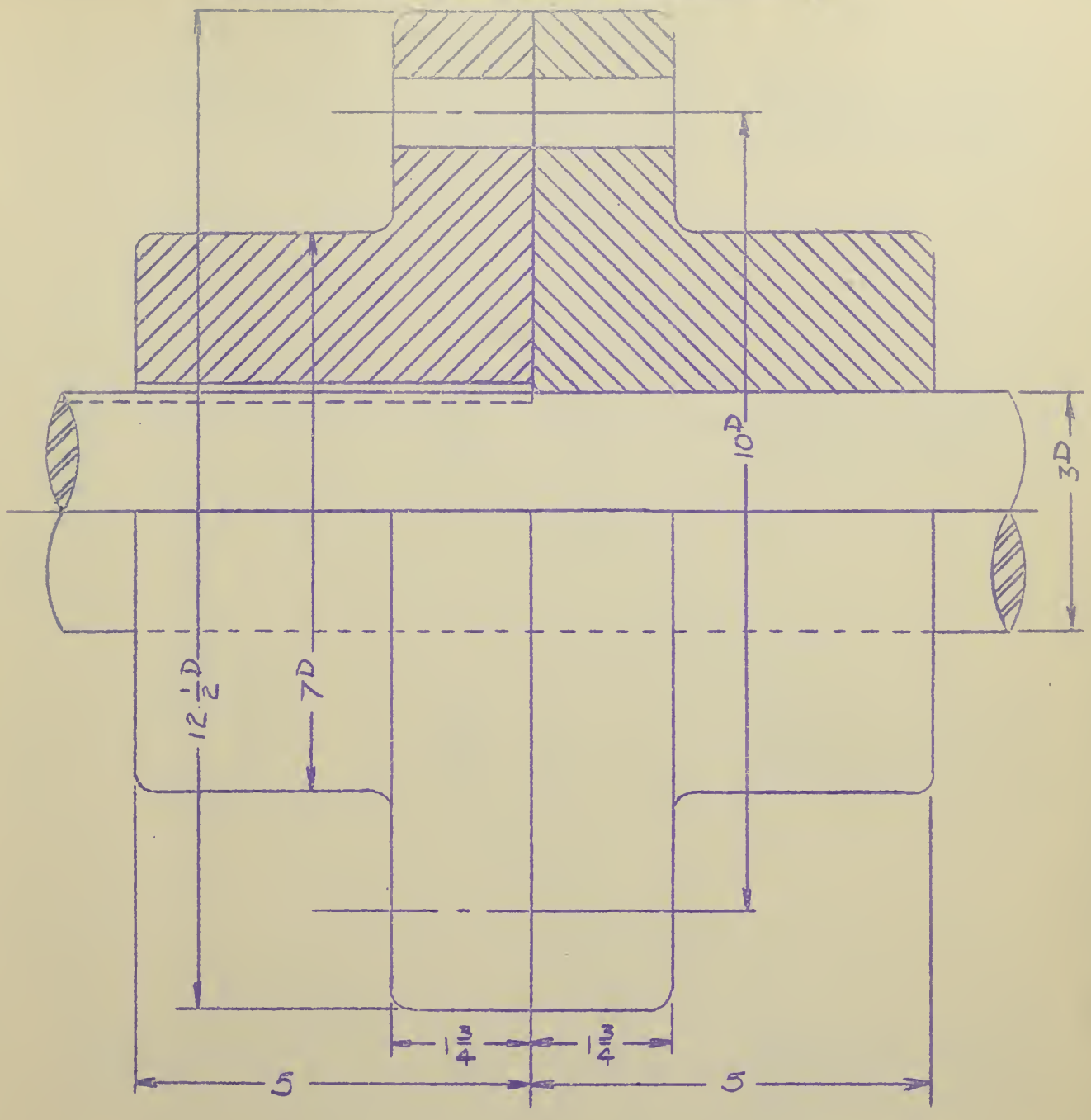

Drawing Layout of the Split Coupling. Plate No. 208

1. Place a sheet of 12x15 paper horizontally on your board.

2. Make a two view, scaled drawing, of the above split coupling, Show a half sectioned front view.

3. Join the two parts of the coupling with six, one inch hexagon headed bolts and nuts. Be sure to note the bolt specifications on your drawing.

HE

SPECIAL STUDY AND ACTIVITY GUIDE NO. 11 (supplement)

AMERICAN STANDARD CAP SCREWS

(See Special Study and Activity Guide No. 12 of Cap Screw sizes.)

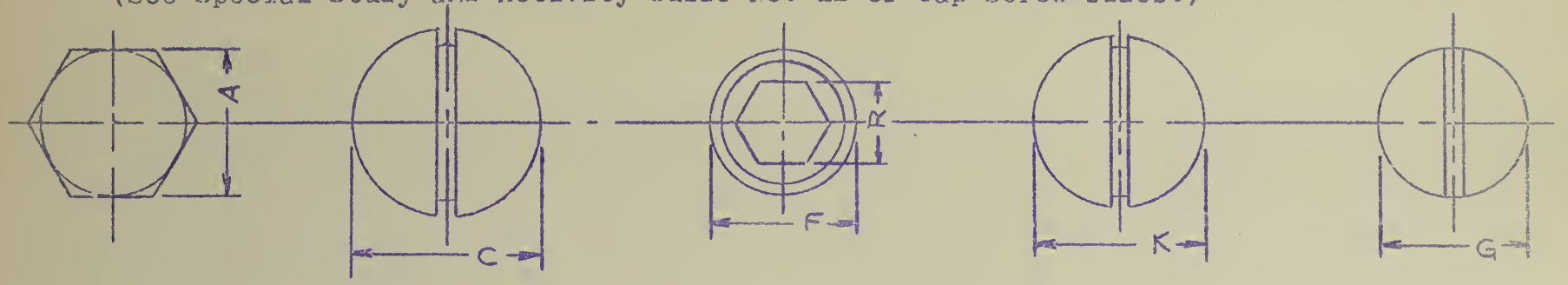

R = BY TRIAL

Hexagon Head

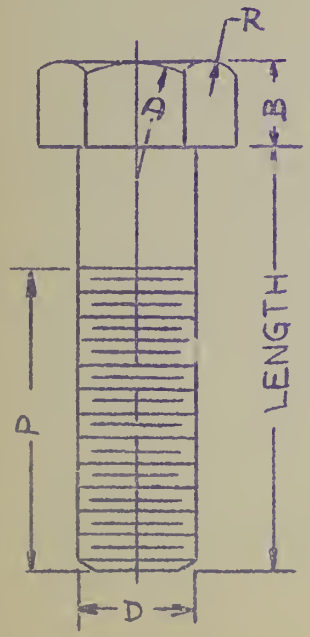

Flat Head

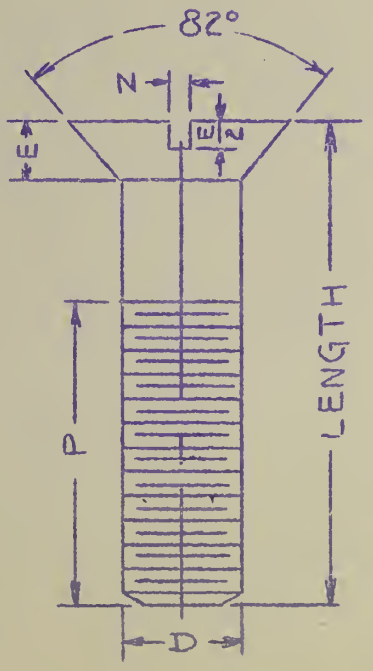

Socket Head

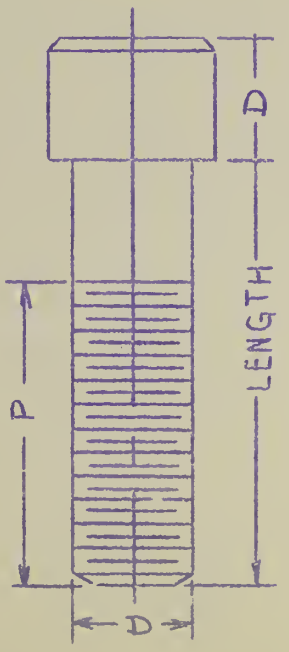

Button Head

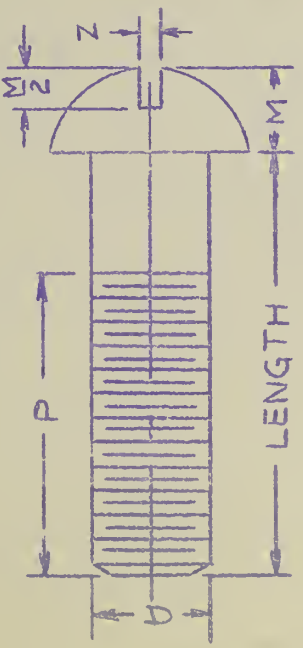

Fillister Head

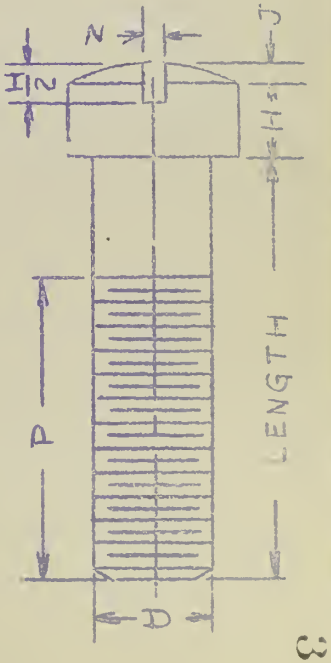

Adapted from Edward Berg, Mechanical Drawing, Book II, Milwaukee: Bruce Publishing Company, 1942, p. 56.

AMERICAN STANDARD CAP SCREW SIZES (supplement)

D-Diameter	1/4	5/16	3/8	7/16	1/2	9/16	5/8	3/4	7/8
A-Across flats	7/16	1/2	9/16	5/8	3/4	13/16	7/8	1	1-1/8
B-Height of head	3/16	15/64	9/32	21/64	3/8	27/64	15/32	9/16	21/32
C-Diam. of head	1/2	5/8	3/4	13/16	7/8	1	1-1/8	1-3/8	- - -
E-Height of head	.146	.183	.220	.220	.220	.256	.293	.366	- - -
F-Diam. of head	3/8	7/16	9/16	5/8	3/4	13/16	7/8	1	1-1/8
G-Diam. of head	3/8	7/16	9/16	5/8	3/4	13/16	7/8	1	1-1/8
H-Height of head	11/64	13/64	1/4	19/64	21/64	3/8	27/64	1/2	19/32
J-Height of Oval	.044	.050	.064	.071	.084	.091	.099	.112	.126
K-Diam. of head	7/16	9/16	5/8	3/4	13/16	15/16	1	1-1/4	- - -
M-Height of head	.191	.246	.273	.328	.355	.410	.438	.547	- - -
N-Width of slot	.070	.079	.088	.098	.110	.123	.138	.154	.173
R-Across flats	3/16	7/32	5/16	5/16	3/8	3/8	1/2	9/16	9/16

P-Thread length - Equals 2xD plus 1/4" for coarse-thread series and 1-1/2xD plus 1/4" for fine-thread series.

(See Special Study and Activity Guide No. 11 for Cap Screw shapes)

Directions:

1. Look across diameter line until you find the correct Cap Screw diameter.
2. Trace down the diameter column until you come to the dimension of the needed part as listed at the left.
3. Change any decimal to the nearest 1/32 of an inch.

Adapted from Edward Berg, Mechanical Drawing, Book II, Milwaukee: Bruce Publishing Company, 1942, p. 56.

Drawing Layout of a Button Head Cap Screw. Plate No. 209

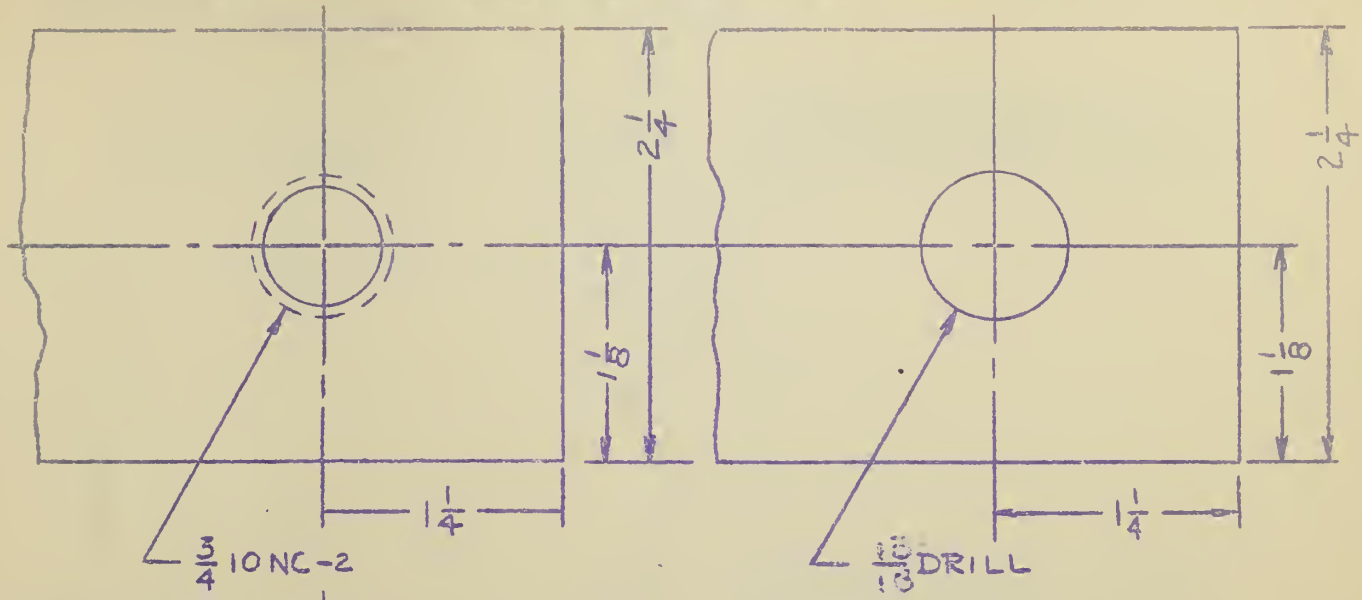

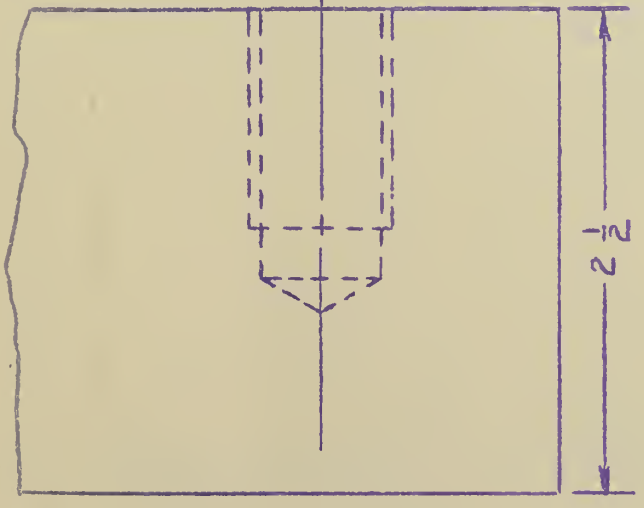

Detail of Base

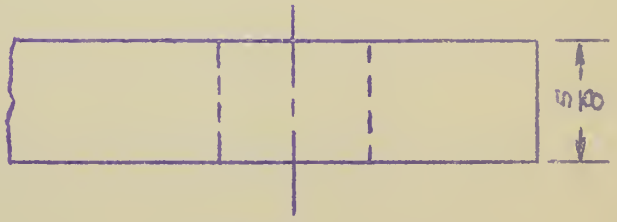

Detail of Plate

1. Place paper vertically on your drawing board.
2. Make a Top and Front assembly drawing of the plate and base held together by a 3/4" Button Head Cap Screw.
3. Make the Front view a full sectioned drawing.
4. Refer to Special Study and Activity Guides No. 11 and 12 for shape and size.

Adapted from Edward Berg, Mechanical Drawing, Book II, Milwaukee: Bruce Publishing Company, 1942, p. 60.

SPECIAL STUDY AND ACTIVITY GUIDE NO. 14 (supplement)

AMERICAN STANDARD MACHINE SCREWS.

(See Special Study and Activity Guide No. 15 for Machine Screw sizes)

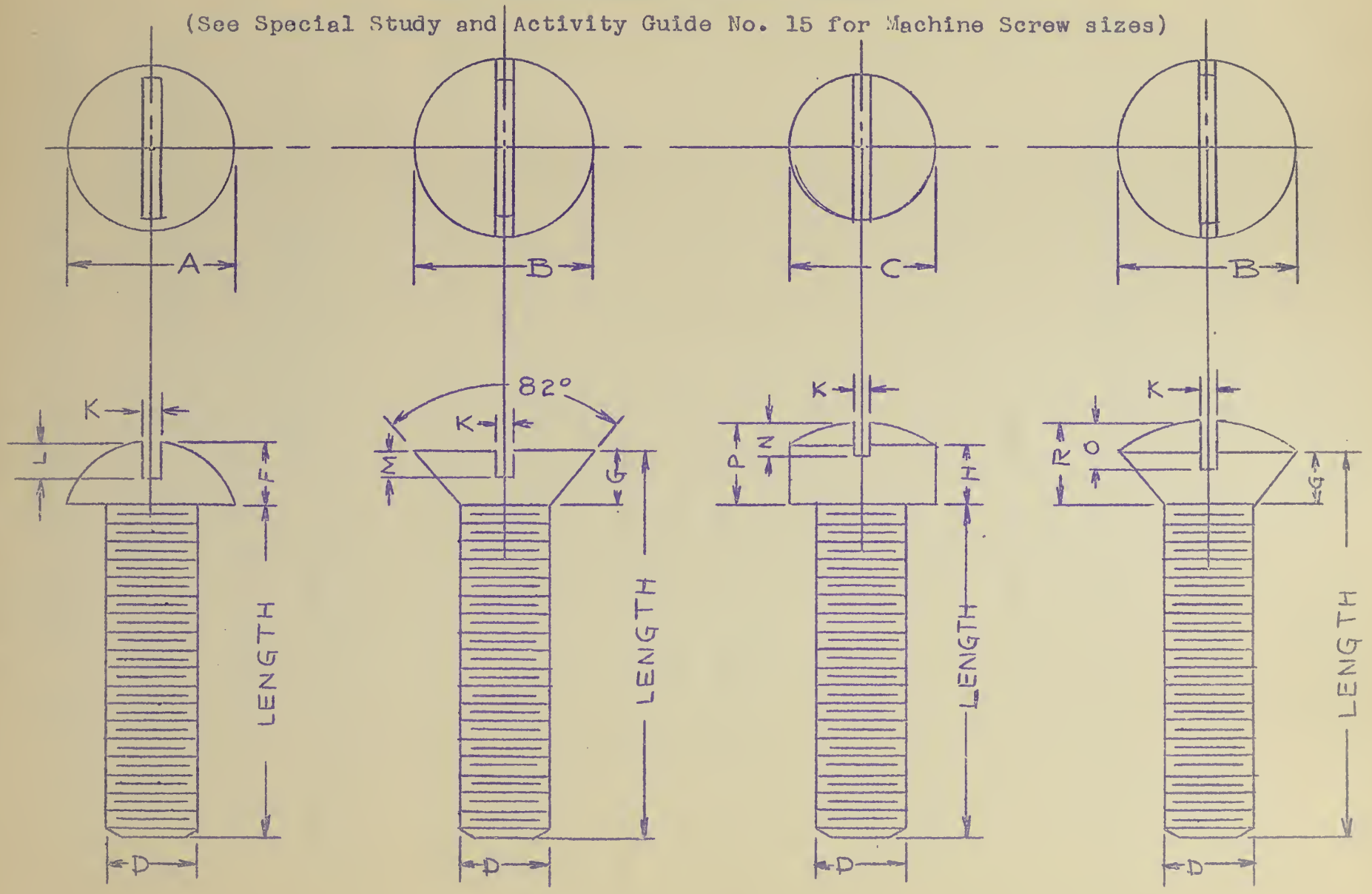

Round Head Flat Head Fillister Head Oval Head

Adapted from Edward Berg, Mechanical Drawing, Book II, Milwaukee: Bruce Publishing Company, 1942, p. 57.

32-1

SPECIAL STUDY AND ACTIVITY GUIDE NO. 15 (supplement)

AMERICAN STANDARD MACHINE SCREW SIZES

Size	Diam.	Head Size												
		A	B	C	F	G	H	K	L	M	N	O	P	R
0	.060	.113	.119	.096	.053	.035	.038	.031	.039	.015	.025	.030	.059	.056
1	.073	.138	.146	.118	.061	.043	.046	.033	.043	.019	.031	.038	.070	.068
2	.086	.162	.172	.140	.070	.051	.055	.036	.048	.023	.037	.045	.083	.080
3	.099	.187	.199	.161	.078	.059	.063	.038	.053	.027	.043	.052	.095	.092
4	.112	.211	.225	.183	.086	.067	.072	.040	.058	.030	.048	.059	.107	.104
5	.125	.236	.252	.205	.095	.075	.081	.043	.062	.034	.054	.067	.120	.116
6	.138	.260	.279	.226	.103	.083	.089	.045	.067	.038	.060	.074	.132	.128
8	.164	.309	.332	.270	.119	.100	.106	.050	.076	.045	.071	.088	.156	.152
10	.190	.359	.385	.313	.136	.116	.123	.055	.086	.053	.083	.103	.180	.176
12	.216	.408	.438	.357	.152	.132	.141	.059	.095	.060	.094	.117	.205	.200
1/4	.250	.472	.507	.414	.172	.153	.163	.066	.108	.070	.109	.136	.237	.232
5/16	.312	.591	.636	.519	.214	.192	.205	.077	.130	.088	.137	.171	.297	.290
3/8	.375	.708	.762	.622	.254	.230	.246	.088	.153	.106	.164	.206	.355	.347

(See Special Study and Activity Guide No. 14 for Machine Screw shapes.)

Directions:

1. The diameter and wire size of the machine screw is listed in the two columns at the left.
2. Place a scale, horizontally, under the correct wire size.
3. To find a dimension, trace down the correct column until you come to the scale.
4. Change the decimal to the nearest 1/32 of an inch.

Adapted from Edward Berg, Mechanical Drawing, Book II, Milwaukee: Bruce Publishing Company, 1942, p. 57.

Drawing Layout of a Countersunk Machine Screw. Plate No. 210

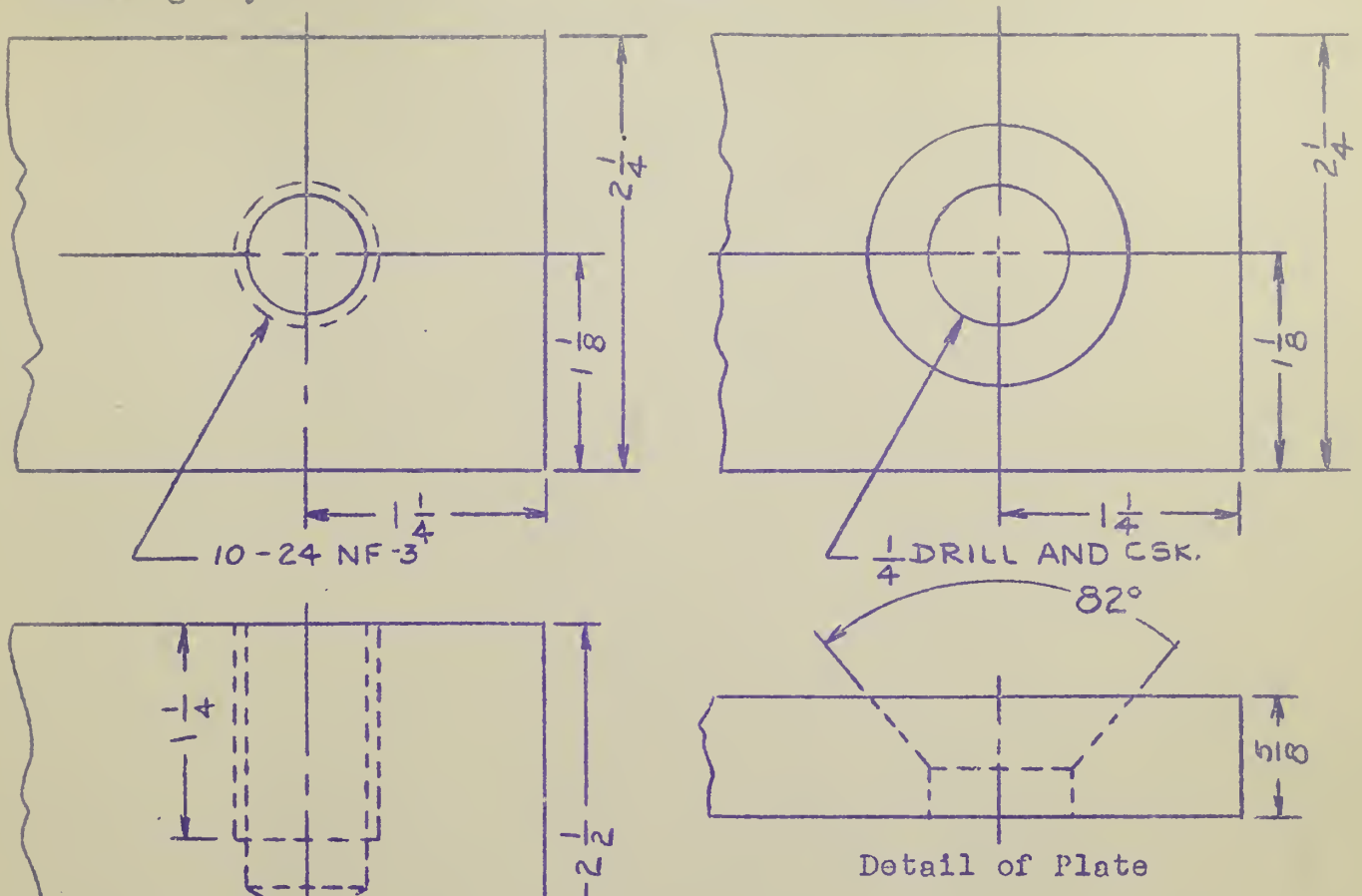

Detail of Plate

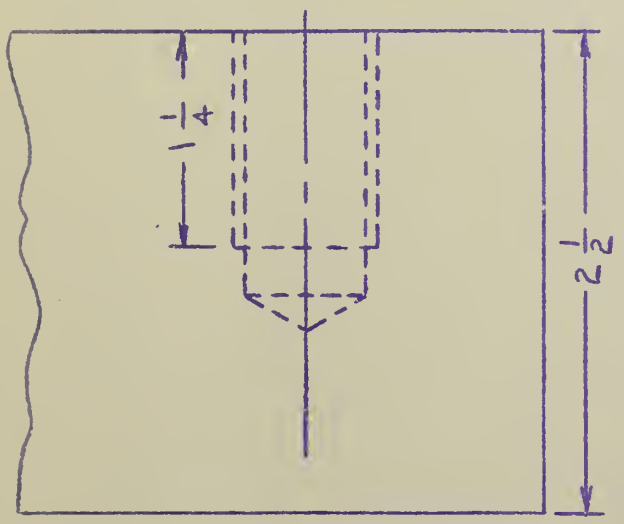

Detail of Base

1. Place paper vertically on your drawing board.
2. Make a Top and Front assembled drawing of the plate and base that is held together by a 10-24 Countersunk Machine Screw.
3. Make the Front view a full sectioned drawing.
4. Refer to Special Study and Activity Guides No. 14 and 15 for shape and size of machine screw.

Adapted from Edward Berg, Mechanical Drawing, Book II, Milwaukee: Bruce Publishing Company, 1942, p. 60.

SPECIAL STUDY AND ACTIVITY GUIDE NO. 17

Drawing Layout of a Hexagon Head Cap Screw. Plate No. 211

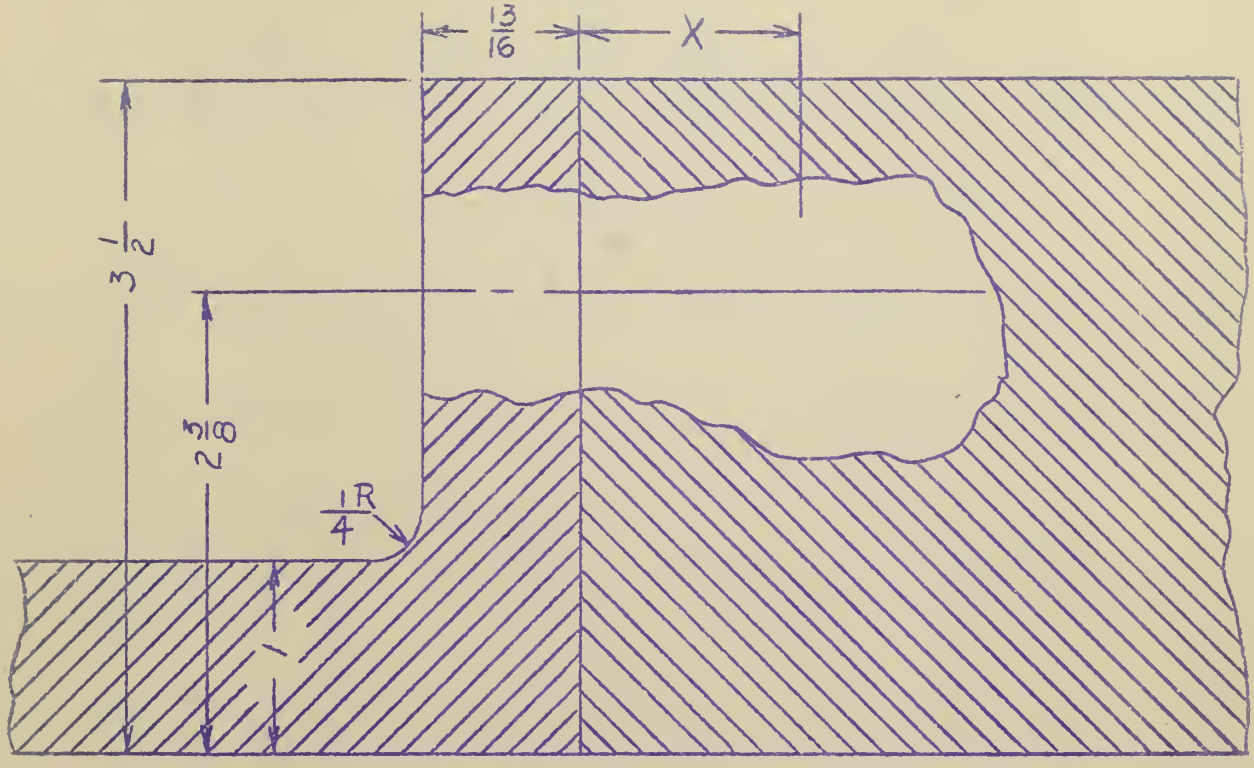

1. Place paper horizontally on your board.

2. Draw the Front and Left side views. Make the Front view, as above, a full sectioned drawing.

3. In your drawing, bolt the L-shaped iron casting to the cast iron base with a 9/16" Hexagon head Cap Screw. What size drill hole will you have to make in the L-shaped cast iron part?

4. Refer to Special Study and Activity Guides No.s 11 and 12 for shape and size of Cap Screw.

Adapted from Carl L. Svensen, Drafting for Engineers, New York: D. Van Nostrand Company, 1935, p. 426.

HE

Drawing Layout of a Fillister Head Machine Screw Plate No. 212

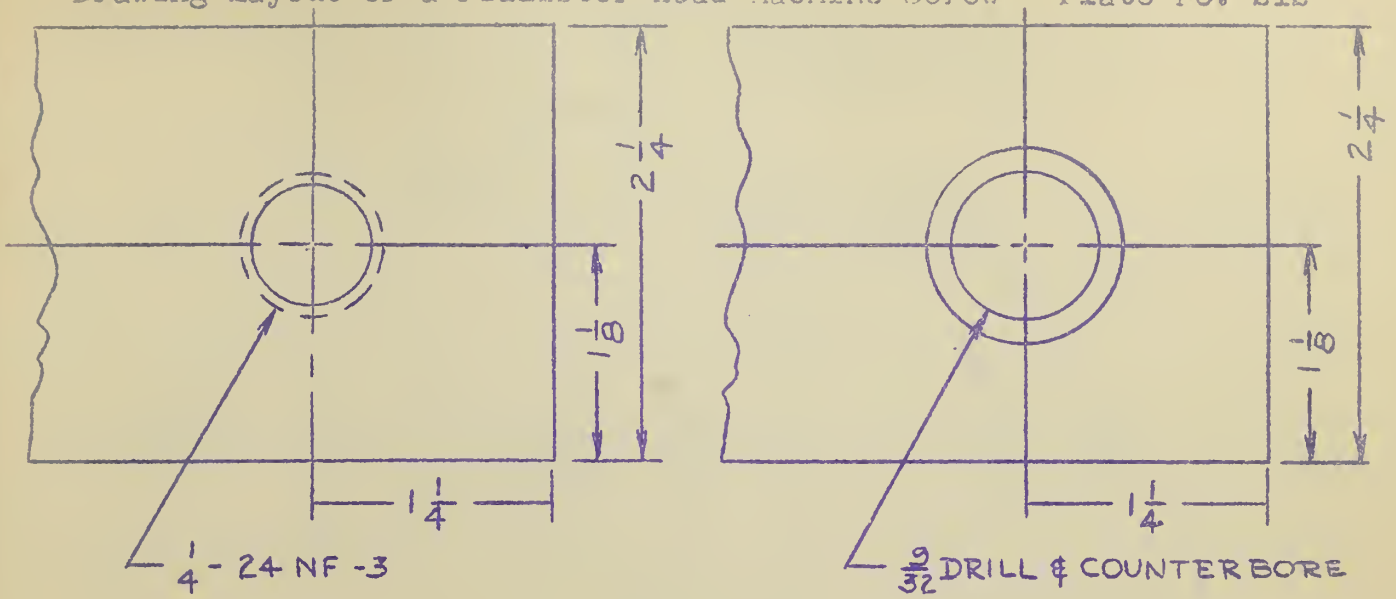

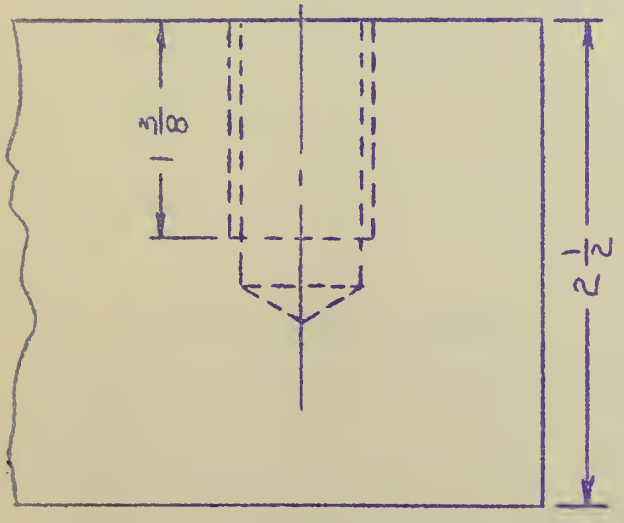

Detail of Base

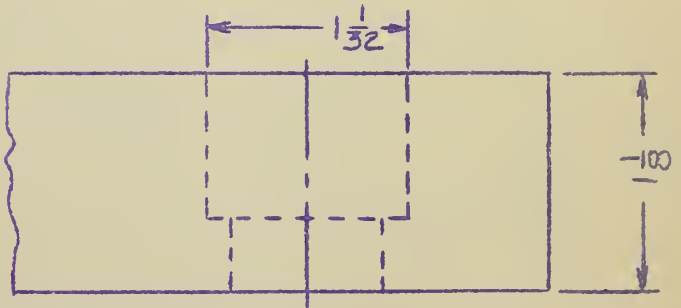

Detail of Plate

1. Place paper vertically on your drawing board.
2. Make a Top and Front assembled drawing of the plate and base that is held together by a 1/4"-24 Fillister Head Machine Screw.
3. Make the Front view a full sectioned drawing.
4. Refer to Special Study and Activity Guide No. 14 and 15 for shape and size of machine screw.

Adapted from Edward Berg, Mechanical Drawing, Book II, Milwaukee: Bruce Publishing Company, 1942, p. 60.

HE

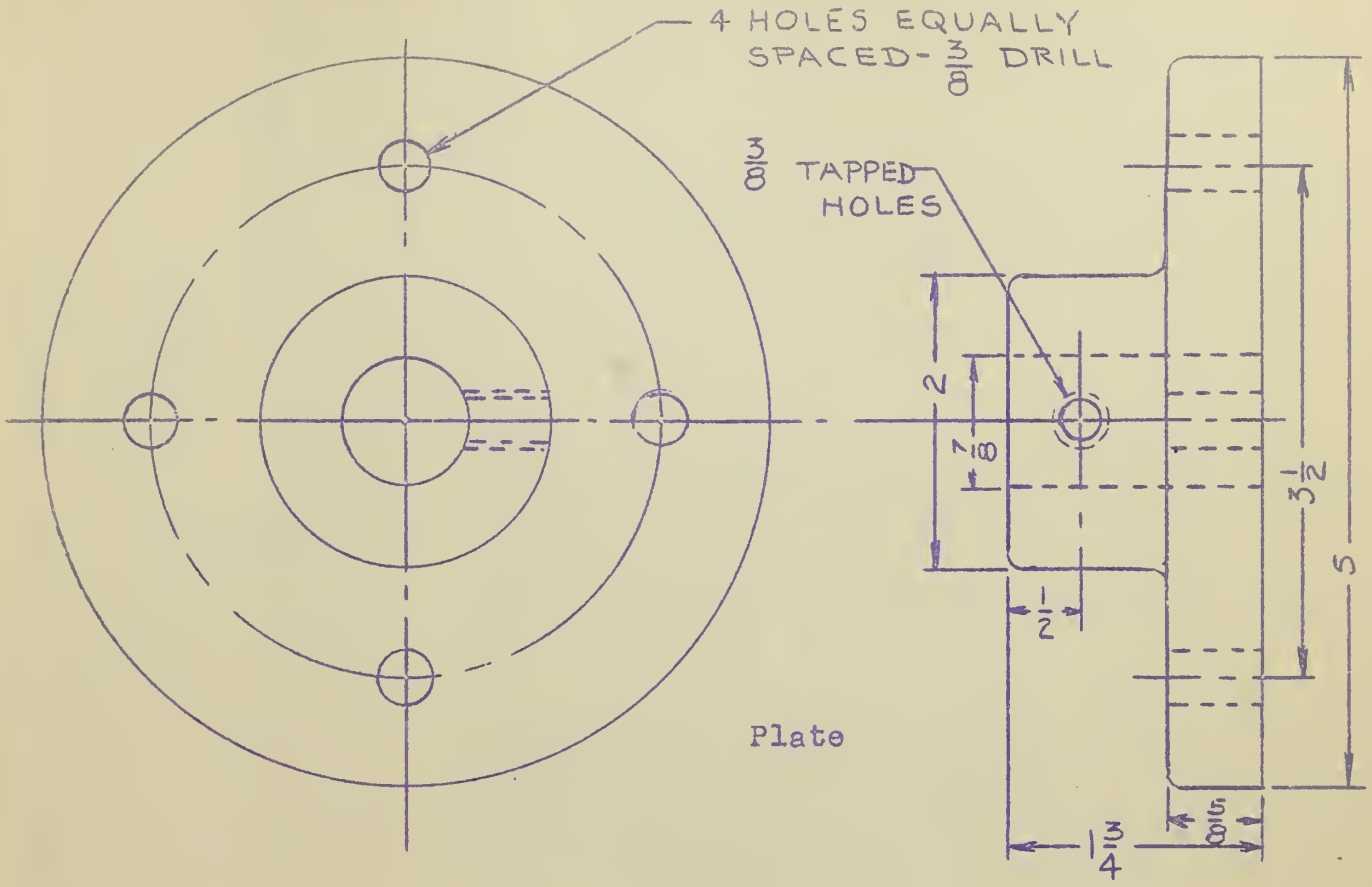

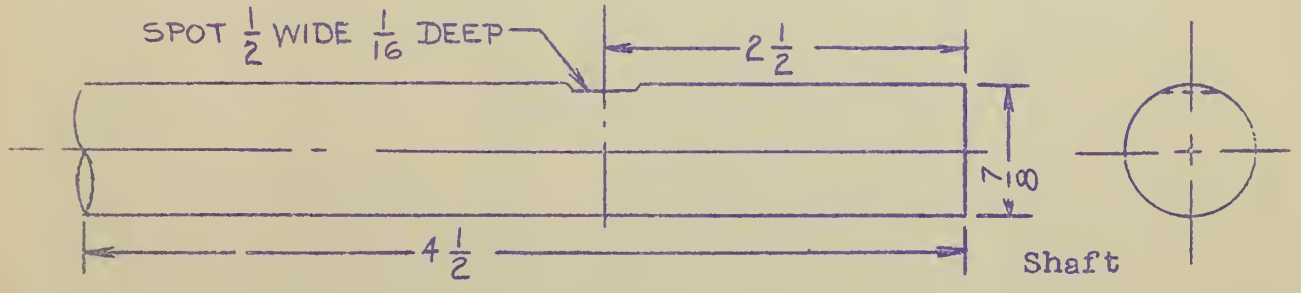

Drawing Layout of a Circular Plate with Set Screw Plate No. 213

1. Place paper vertically on your drawing board.
2. Make a two view drawing, Front and Left Side, of the Circular Plate and Shaft joined together by a set screw.
3. The set screw should be square headed and 3/8" in diameter.

HE

SPECIAL STUDY AND ACTIVITY GUIDE NO. 20 (supplement)

Dimensions for Square Keys and Key Seats.

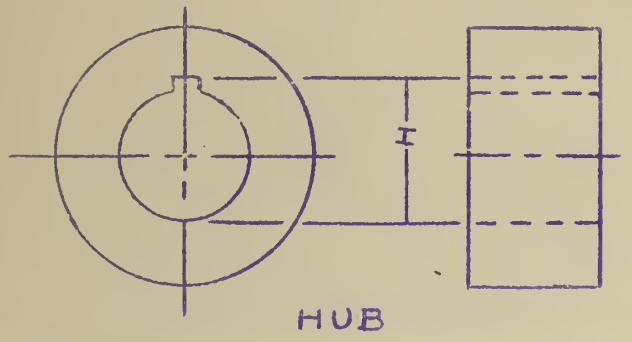

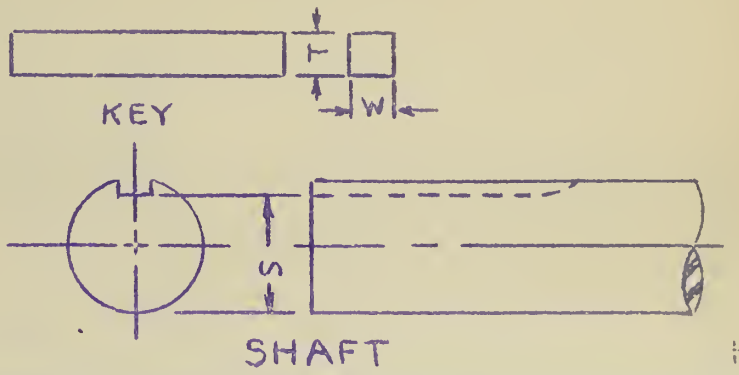

Shaft Diam. D.	Key Width and Thickness W - T	S	H	Shaft Diam. D.	Key Width and Thickness W - T	S	H
1/2	1/8 x 1/8	0.4294	0.5544	1-1/4	1/4 x 1/4	1.1130	1.3630
9/16	1/8 x 1/8	0.4927	0.6177	1-5/16	3/8 x 3/8	1.0980	1.4730
5/8	3/16 x 3/16	0.5162	0.7037	1-3/8	3/8 x 3/8	1.1615	1.5365
11/16	3/16 x 3/16	0.5800	0.7675	1-7/16	3/8 x 3/8	1.2250	1.6000
3/4	3/16 x 3/16	0.6444	0.8319	1-1/2	3/8 x 3/8	1.2885	1.6635
13/16	3/16 x 3/16	0.7078	0.8953	1-9/16	3/8 x 3/8	1.3520	1.7270
7/8	3/16 x 3/16	0.7711	0.9586	1-5/8	3/8 x 3/8	1.4155	1.7905
15/16	1/4 x 1/4	0.7965	1.0465	1-11/16	3/8 x 3/8	1.4790	1.8540
1	1/4 x 1/4	0.8600	1.1100	1-3/4	3/8 x 3/8	1.5425	1.9175
1-1/16	1/4 x 1/4	0.9535	1.1735	1-13/16	1/2 x 1/2	1.5725	2.0275
1-1/8	1/4 x 1/4	0.9870	1.2370	1-7/8	1/2 x 1/2	1.6360	2.0920
1-3/16	1/4 x 1/4	1.0490	1.2990	1-15/16	1/2 x 1/2	1.6995	2.1555

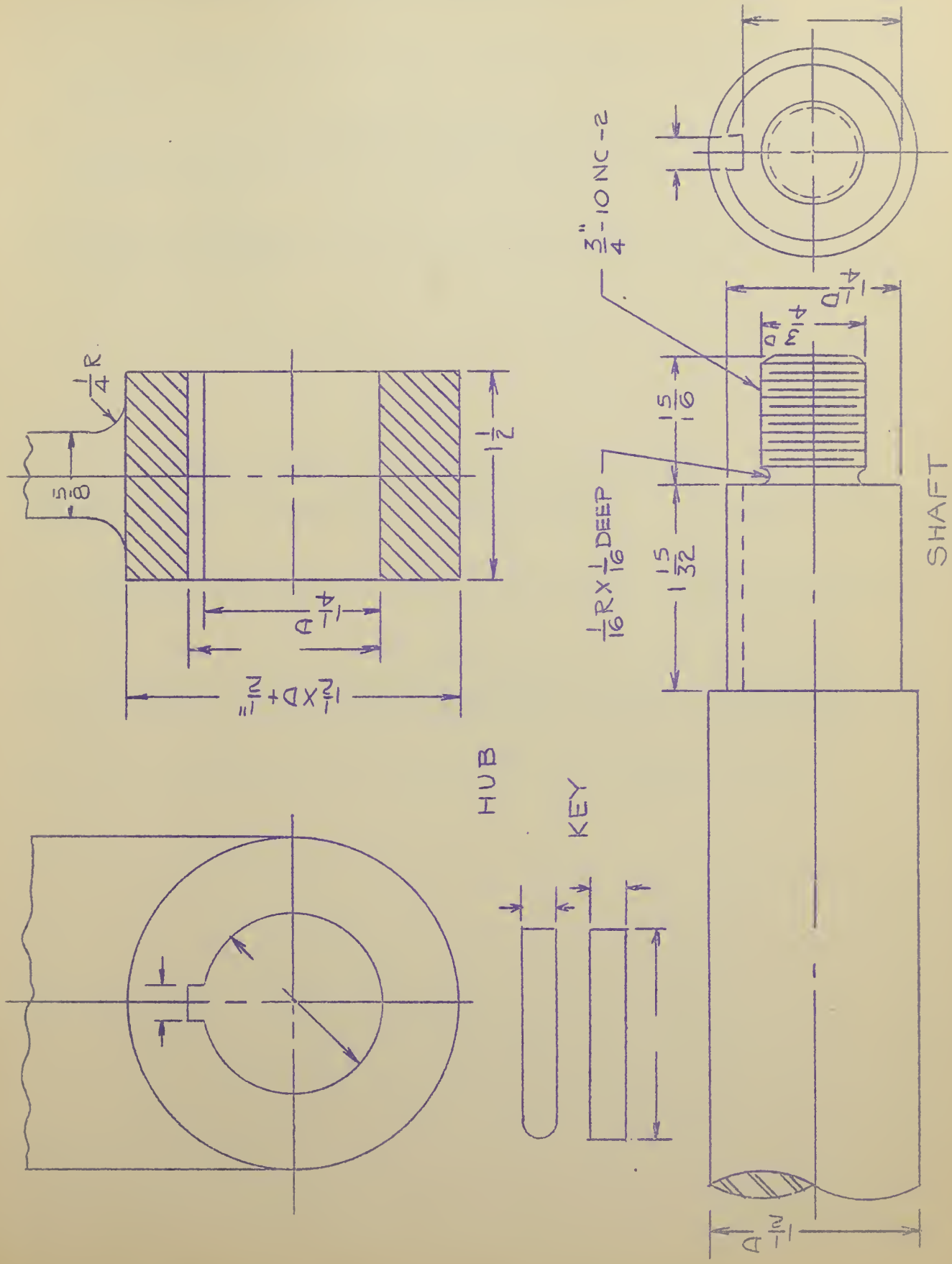

Adapted from Edward Berg, Mechanical Drawing, Book II, Milwaukee: Bruce Publishing Company, 1942, p. 67.

SPECIAL STUDY AND ACTIVITY GUIDE NO.21

Drawing Layout: Square Key application. Plate No. 214

1. Place a 12x15 sheet of paper horizontally on your drawing board.
2. Make a two view sectional assembly of the Hub and Shaft joined by a square key. Place a hexagon nut on the end of the shaft.
3. Refer to Special Study and Activity Guide No. 20 for square key sizes.

SPECIAL STUDY AND ACTIVITY GUIDE NO.22

Drawing Layout: Woodruff Key application. Plate No. 215

1. Place a 12x15 sheet of paper horizontally on your drawing board.
2. Make a two view sectional assembly of the Hub and Shaft.
3. To lock the shaft to the hub, draw in a No. 810 Woodruff Key. What are the overall dimensions of the Woodruff Key?
4. Place a hexagon nut on the end of the threaded shaft.

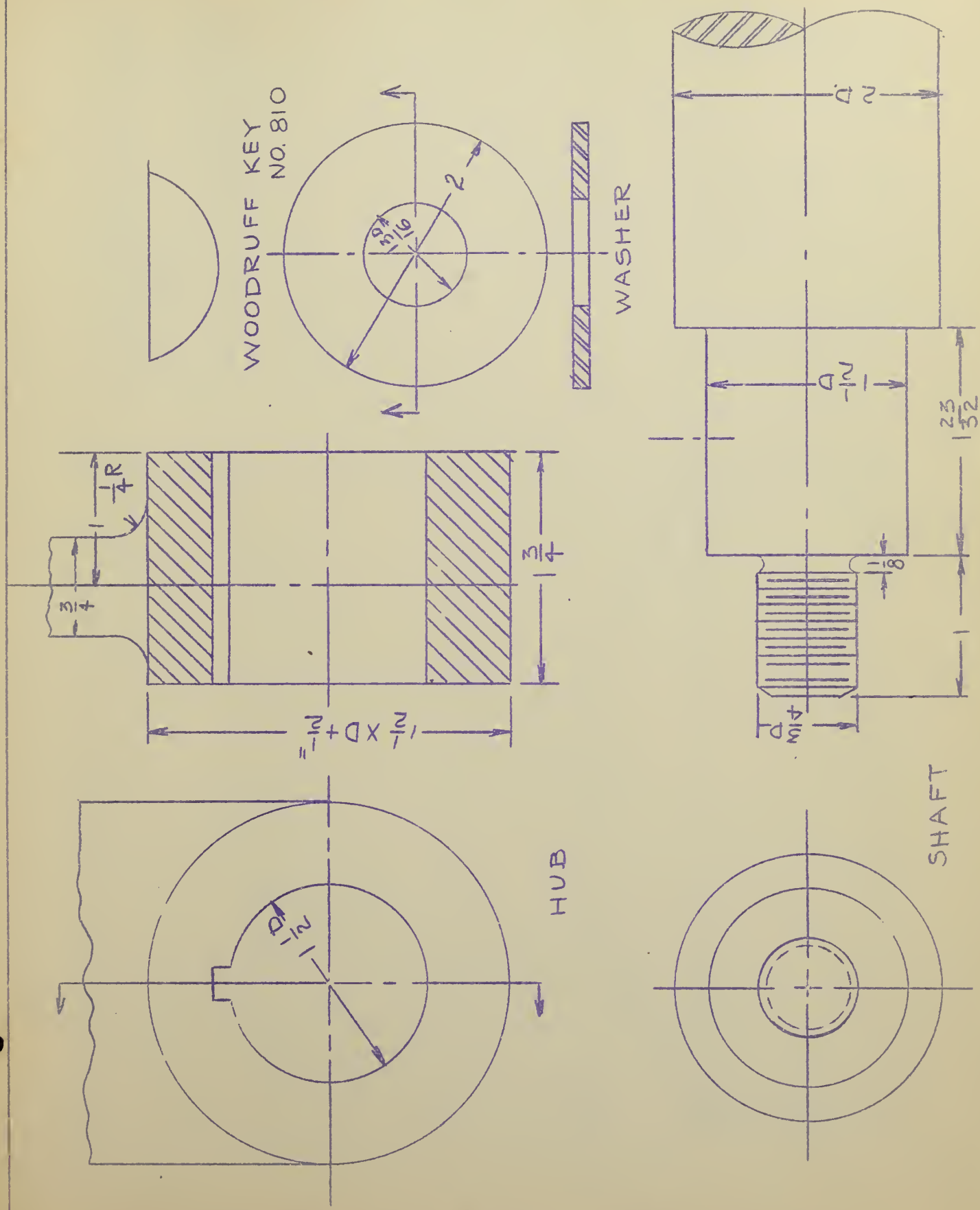

Adapted from Edward Berg, Mechanical Drawing, Book II, Milwaukee: Bruce Publishing Company, 1942, p. 67.

Drawing Layout of a Riveted Tool Box.

Plate No. 216

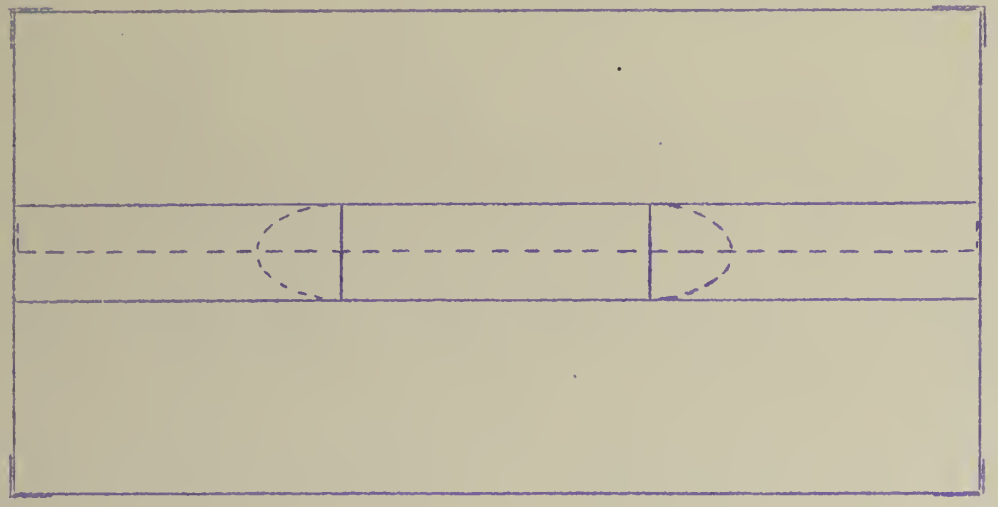

1. Place a 12x18 sheet of paper horizontally on your drawing board.

2. Place 1/8" Flat head rivets on the rivet marks as indicated on the drawing.

(1:92 10:170)

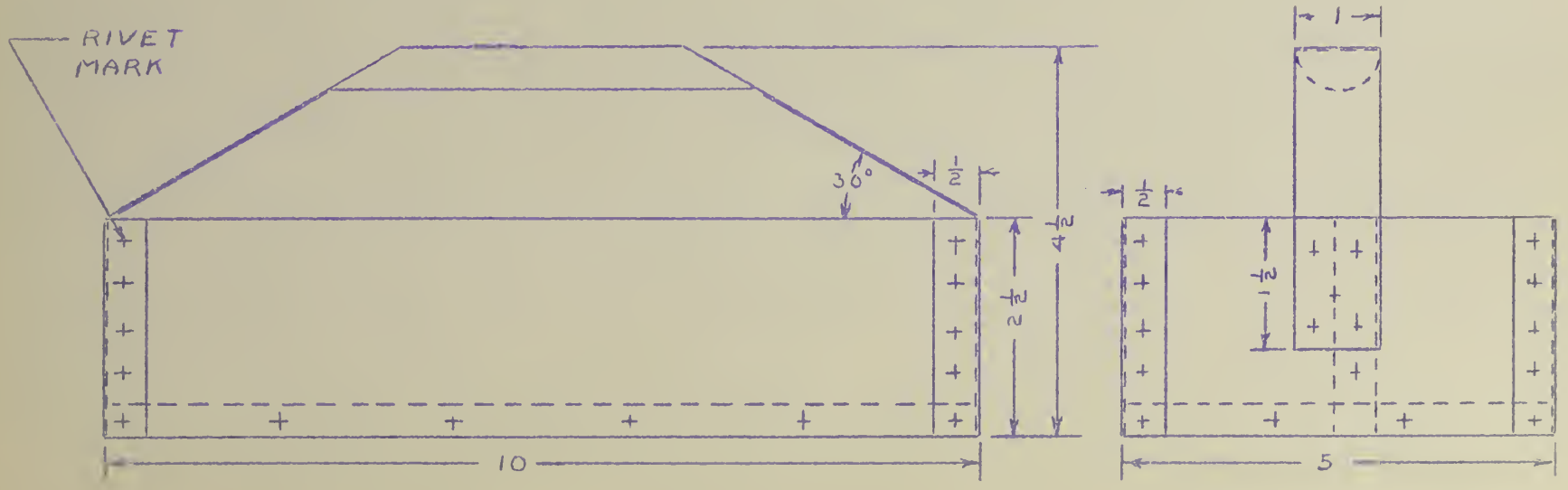

SPECIAL STUDY AND ACTIVITY GUIDE NO. 24.

Drawing Layout of a Machine Stuffing Box — Plate No. 217

1. On a sheet of 12x18 drawing paper, make a two view sectional drawing of a Machine Stuffing Box.

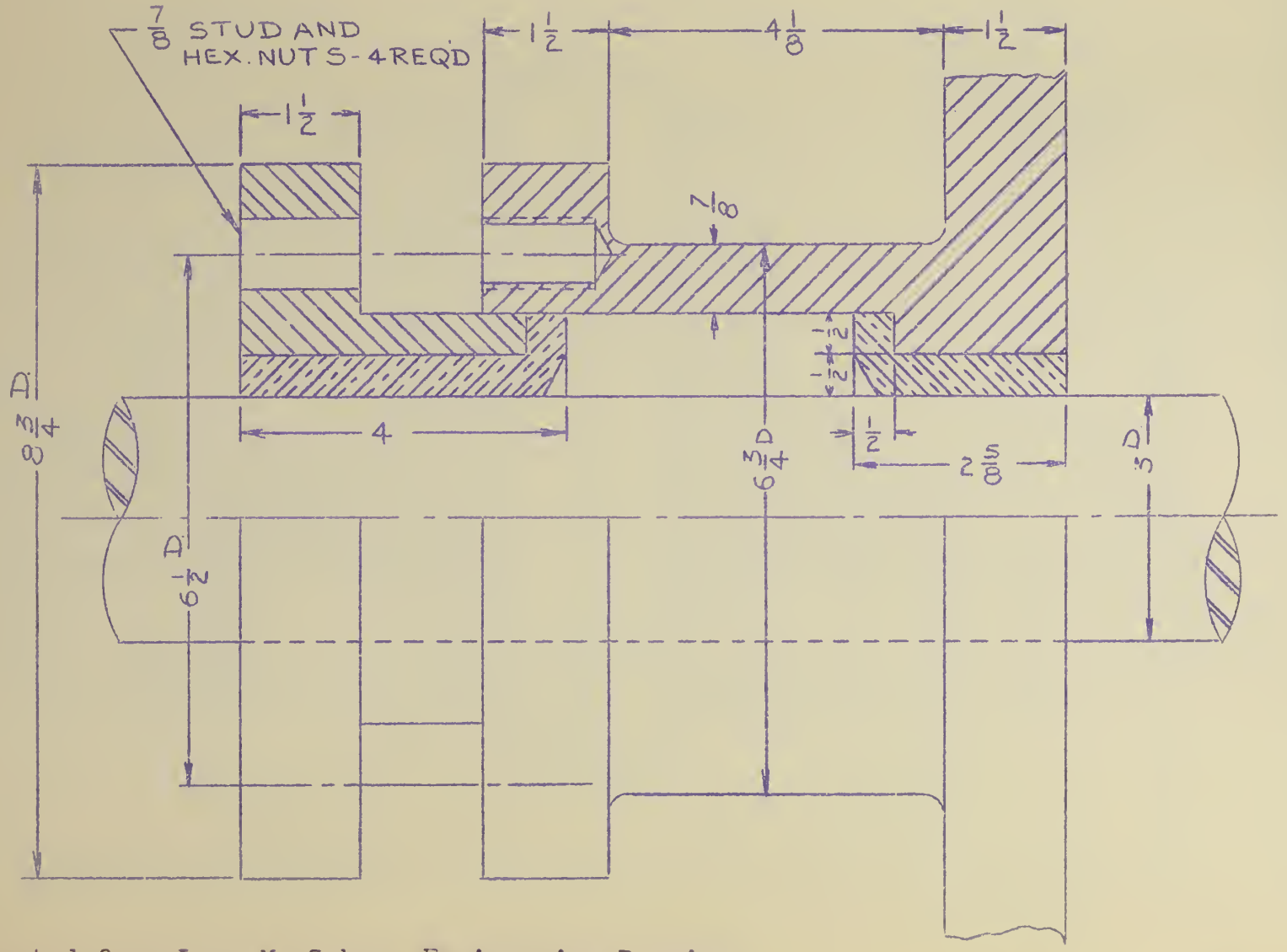

Adapted from Leon M. Sahag, Engineering Drawing, New York: The Ronald Press Company, 1942, p. 333.

48-L

Drawing Layout of a Bearing Plate. Plate No. 218.

1. On a sheet of 12x18 drawing paper. make a two view sectional drawing of the Bearing Plate.

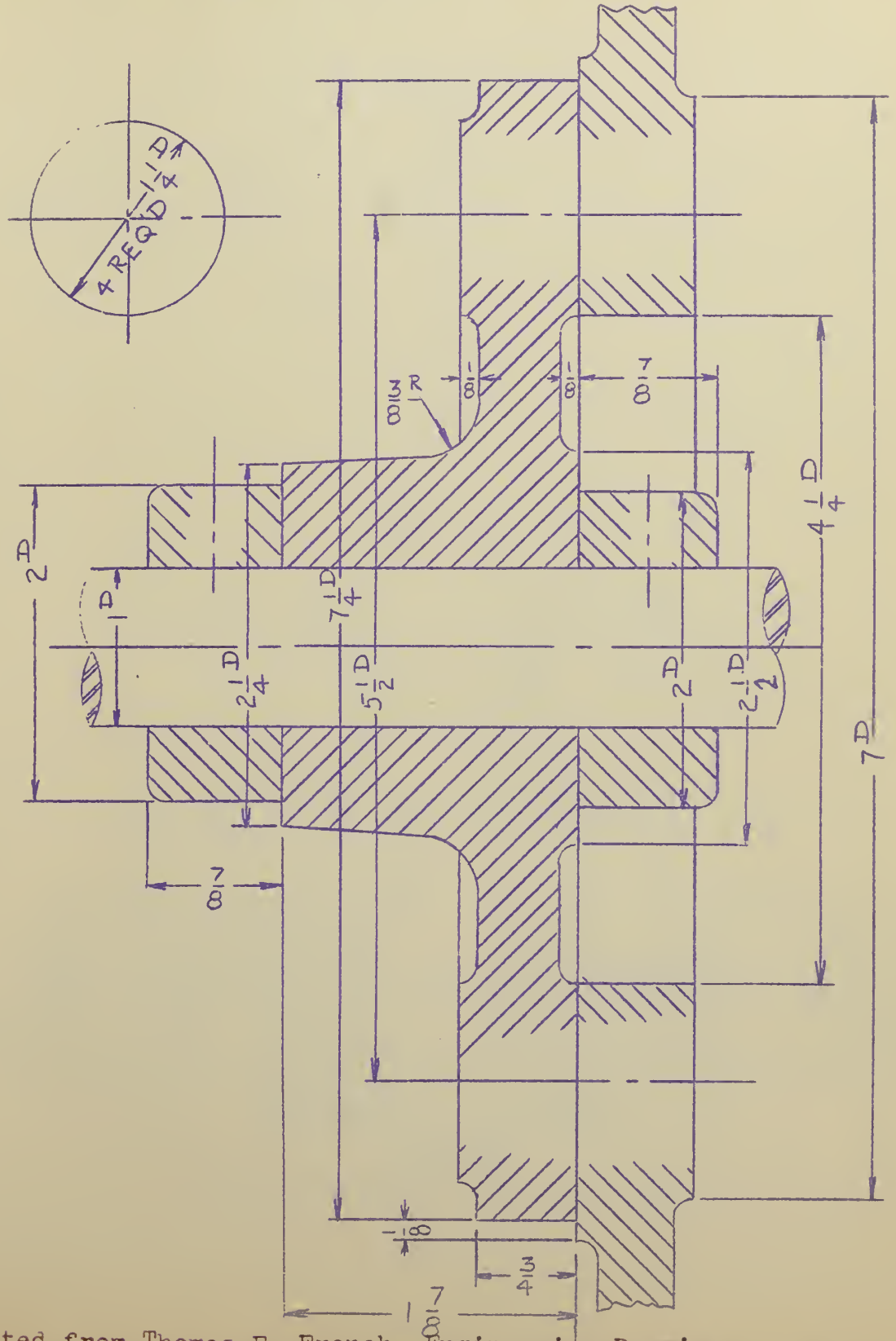

Adapted from Thomas E. French, Engineering Drawing, New York: McGraw-Hill Book Company, 1941, p. 238.

SPECIAL STUDY AND ACTIVITY GUIDE NO. 26.

Drawing Layout of a Stuffing Box and Gland. Plate No. 219

1. Use a piece of 12x18 drawing paper.

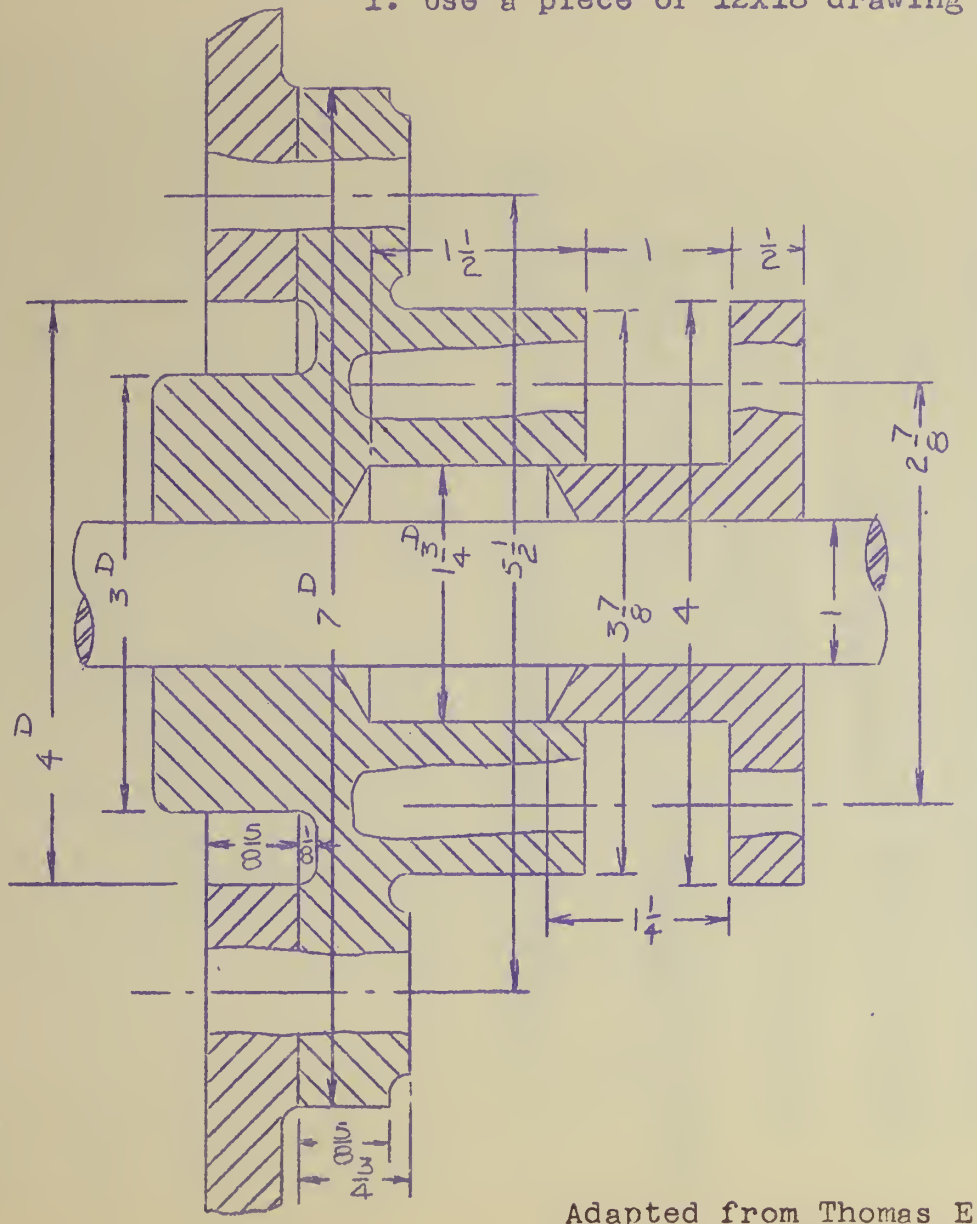

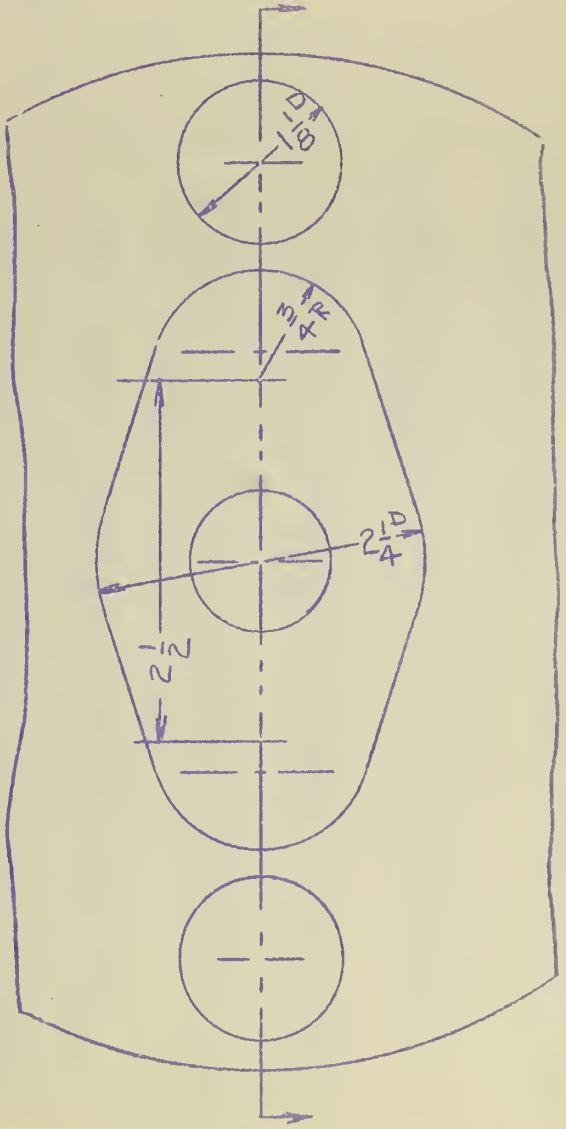

Adapted from Thomas E. French, Engineering Drawing, New York: McGraw-Hill Book Company, 1941, p. 238.

50

E. References for the Pupils' Use

1. French, Thomas E., and Carl L. Svensen, Mechanical Drawing. New York: McGraw-Hill Book Company, Inc., 1940.

2. Johnson, William H., and Louis V. Newkirk, Modern Drafting. New York: The Macmillan Company, 1944.

3. Green, Daniel, Drawing for Life and Industry. Milwaukee: The Bruce Publishing Company, 1945.

4. Detroit Public Schools, Drafting Lessons, (Book I, II, III). Detroit: Board of Education, City of Detroit, 1939.

5. Berg, Edward, Mechanical Drawing, Book II. Milwaukee: The Bruce Publishing Company, 1942.

6. Kepler, Frank R., Mechanical Drafting Handbook. Milwaukee: The Bruce Publishing Company, 1931.

7. Giesecke, Frederick E., Alva Mitchell, and Henry C. Spencer, Technical Drawing. New York: The Macmillan Company, 1940.

8. Sahag, Leon M., Engineering Drawing. New York: Ronald Press Company, 1941.

9. French, Thomas E., A Manual of Engineering Drawing. New York: The McGraw-Hill Book Company, Inc., 1946.

10. Svensen, Carl L., Drafting for Engineers. New York: D. Van Nostrand Company, Inc., 1935.

Boston University
School of Education
Library

Test

Directions: Read each statement carefully. If you think the statement is TRUE, pencil a circle around the T. If you think the statement is FALSE, circle the F.

1. The thickness or width of a hexagon bolt head and nut are the same dimension . . . . . T F

2. A small threaded hole is said to be tapped . . . . . T F

3. A stud bolt has threads on both ends . . . . . T F

4. To state the measurements of a standard bolt, we must specify the diameter and length from under the head to end of bolt . . . . . T F

5. Sir Joseph Whitworth, an Englishman, made the first attempt to develop a standard uniform thread . . . . . T F

6. The threads on a small bolt are usually made by using a tap . . . . . T F

7. Sheet-metal objects are fastened together with structural rivets . . . . . T F

8. A screw with a right-hand thread is turned clockwise to enter a nut or threaded hole . . . . . T F

9. The first early screws were made by hand with each nut made to fit just one bolt . . . . . T F

10. The pitch of a screw is the distance from a point on a screw thread to a corresponding point on the next thread . . . . . T F

11. William Sellers, with the Sellers thread, started the movement to standardize screw threads in the United States . . . . . T F

12. A screw thread is a ridge on the inside or outside surface of a cylinder or cone . . . . . T F

13. A screw with a left-hand thread is turned from right to left to enter a nut or threaded hole . . . T F

14. A Woodruff key is used for heavy-duty work . . . . . T F

15. Mild steel or wrought iron structural iron rivets are driven hot . . . . . T F

16. The lead of a screw is the distance a screw advances when revolved one turn . . . . . T F

17. The grooves or slots cut to receive a key are called key seats or key ways . . . . . T F

18. Headless or socket-head set screws should be used on turning or moving parts . . . . . T F

19. Machine screws are measured by gage numbers, like No. 10, while cap screws are measured with the inch scale, like 1/4 inch . . . . . T F

20. The heads of machine screws are always circular, and are provided with a slot for a screw driver . . T F

21. Cap screws resemble bolts, but no nuts are used . . T F

22. Cap screws are used in fastening parts in place on machinery, by passing the screw through a drilled hole in one piece and screwing it into a tapped hole in the second piece . . . . . T F

PART II

Directions: A statement is made with three possible answers. You will choose the best answer to complete the statement. When you have made your choice, you will place the number before the answer in the parentheses.

23. Threads in a nut are made by (1) die, (2) reamer, (3) tap . . . . . ( )

24. Studs are used to fasten cylinder heads because (1) cylinder heads are removed frequently, (2) cylinder heads are made of cast iron, (3) it prevents the gasket from being damaged . . . . . ( )

25. The pitch of a screw is (1) its diameter, (2) the length of its threaded part, (3) the number of threads per inch of length, (4) the distance between two adjacent threads . . . . . ( )

26. Heavy pulleys, flywheels, cranks, etc., are generally secured to the shaft by means of (1) nuts and bolts, (2) keys, (3) set screws . . . . . ( )

27. To draw the angles on a hexagon head of a bolt, you would use a (1) 45 degree triangle, (2) 60-30 degree triangle, (3) 60-30 degree and 45 degree triangle . . . . . ( )

16. 5
17. 5
18. 5
19. 6
20. 6
21. 6
22. 6

23. 7
24. 7
25. 7
26. 7
27. 7

28. To find the size of a hexagon bolt head, I would (1) multiply the diameter of the bolt by two, (2) take the diameter of the bolt, (3) look up the diameter of the bolt on an American standard hexagon bolt dimension table . . . . . ( )

29. The note over a threaded hole says 1/2"- 13NC-2. The diameter of the threaded hole is (1) 13/16 inch, (2) 2/16 inch, (3) 1/2 inch . . . . . ( )

30. The note 1/2" - 20 NF-3 found on a drawing refers to (1) the number of bolts to be used, (2) threading specifications, (3) the size and number of holes to be drilled . . . . . ( )

31. The common tinners rivet used in sheet-metal work would be called (1) a structural rivet, (2) an American standard rivet, (3) a boiler rivet . . . . ( )

32. In drawing a "regular thread symbol on a one inch bolt, I would (1) represent the actual pitch, (2) use 1/8 inch pitch, (3) use any pitch I want . . . ( )

PART III

33. Above the tapped hole on a commercial blueprint the following group of letters and numbers were printed. 3/4" - 16 NF-3.

What does the 3/4" mean or stand for? Write out, in as few words as possible, your answer on the line pointing to the 3/4". Do the same thing to the remaining three parts by writing out the answer on the correct line.

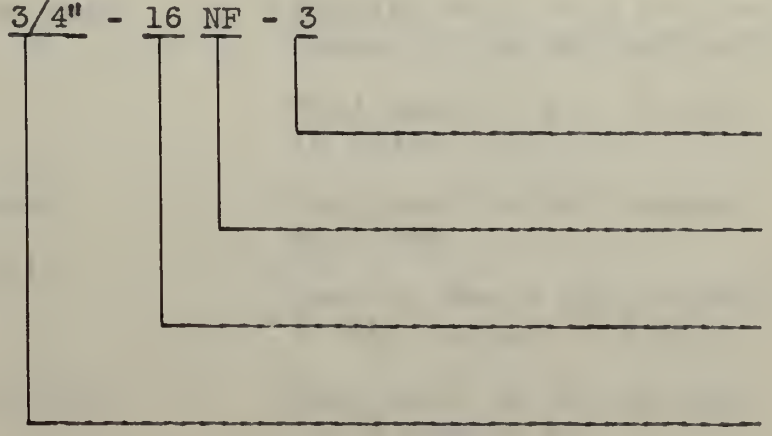

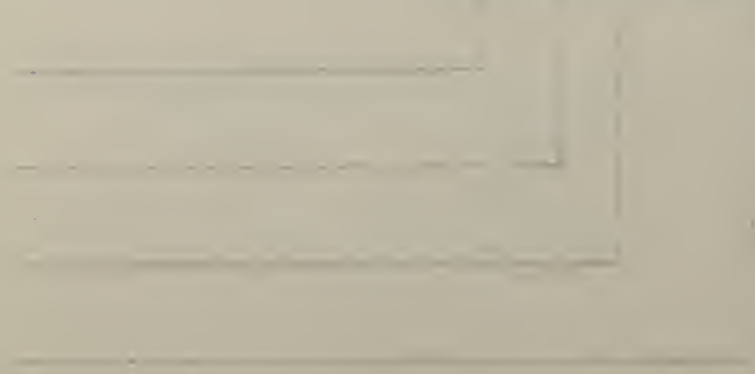

34. Above the nut and bolt on a commercial blueprint the following group of letters and numbers were printed:

1/2" x 4" Hex. Hd. Bolt and Nut: 1/2" - 13 NC-2.

What does the 1/2" mean or stand for? Write out, in as few words as possible, your answer on the line pointing to the 1/2". Do the same thing to the remaining six parts by writing out the answer on the correct line.

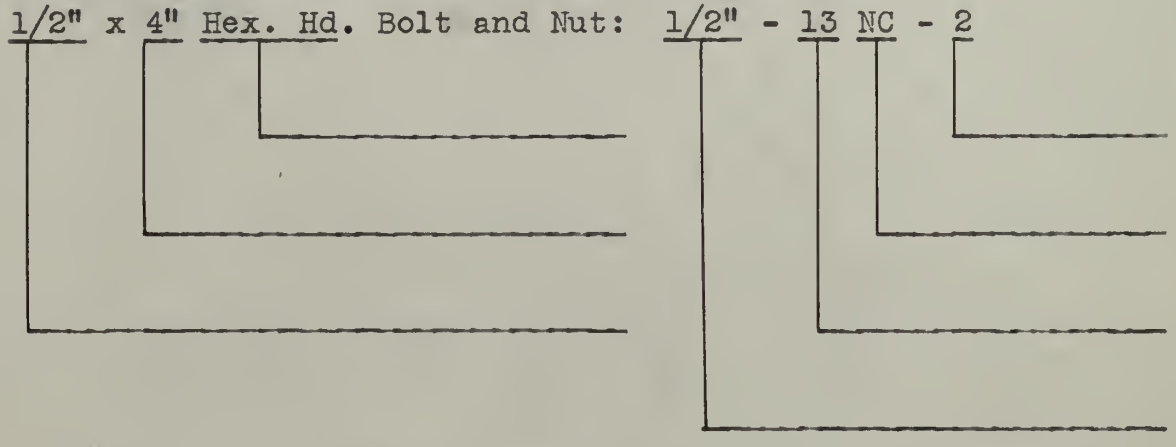

PART IV

Directions: In the parentheses after each word or statement in the right-hand column, write the letter, from the left-hand column that identifies or explains the statement. The items in the left-hand column may be used more than once. Some items may not be used at all.

35.

A. Bottoming tap	Cutting tool used to form holes for screw fasteners . ( )
B. Die	
C. Tap	Tool used to cut threads in holes . . . . . ( )
D. Counterbore	Tool used to cut threads on a rod . . . . . ( )
E. Twist drill	
F. Reamer	Tool to cut a full thread to the bottom of a hole . . ( )
G. Milling cutter	Tool used to cut grooves for a square key . . . . . ( )

36. A. thread on the outside of a member.
B. the sharp edge of the thread.
C. the largest diameter of a screw thread.
D. thread on the inside of a member.
E. the smallest diameter of a screw thread.
F. a mathematical curve as shown by winding a piece of string around a cylinder.

Helix . . . . . ( )
External thread . . ( )
Internal thread . . ( )
Major diameter . . . ( )
Root . . . . . ( )
Crest . . . . . ( )

37. A. Used on the common every-day thread.
B. The British standard thread.
C. The type of thread used on the common electric light bulb.
D. Used on a jackscrew, and wood vise screw.
E. The standard thread for lead screws on lathes.

American National Standard thread . . ( )
Square thread . . . ( )
Whitworth thread . . ( )
Acme thread . . . . ( )

38. A. Class 1 fit.
B. Class 2 fit.
C. Class 3 fit.
D. Class 4 fit.

Stove bolts . . . . . ( )
Objects with coarse threads . ( )
Objects with fine threads . . ( )
Aircraft parts . . . . . ( )
Ordinary bolts and screws . . ( )
Tapped holes . . . . . ( )
Threaded parts of a watch . . ( )
Automobile bolts and nuts . . ( )

39.

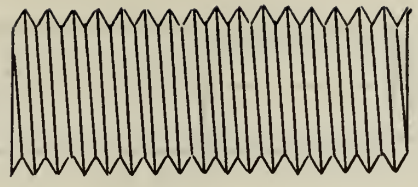

The above figure represents a

A. single thread
B. double thread
C. triple thread
D. multiple thread ( )

40.

The above figure also represents a

A. right-hand thread
B. left-hand thread
C. neither left or right-hand thread ( )

41.

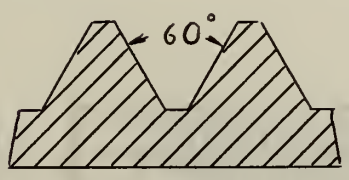

The above figure represents a

A. knuckle thread
B. sharp-V thread
C. American standard thread
D. acme thread ( )

42.

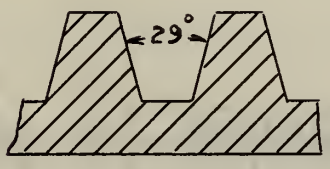

The above figure represents a

A. square thread
B. buttress thread
C. whitworth thread
D. acme thread ( )

43.

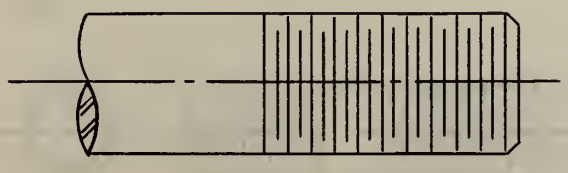

The above figure represents a

A. regular thread
B. semi-conventional American thread
C. regular thread symbol
D. left-hand thread ( )

44.

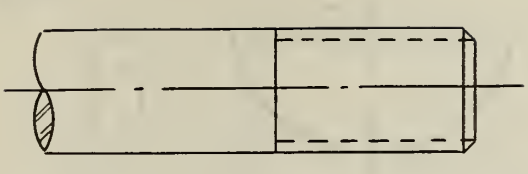

A. double thread symbol
B. simplified thread symbol
C. right-hand thread
D. internal thread symbol ( )

The above figure represents a

45.

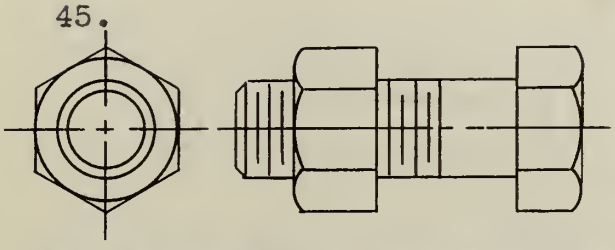

A. square head set screw
B. bolt
C. safety set screw
D. cap screw ( )

The above figure represents a

46.

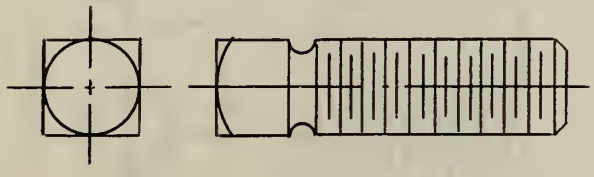

A. square head set screw
B. cap screw
C. fillister screw
D. safety set screw ( )

The above figure represents a

47.

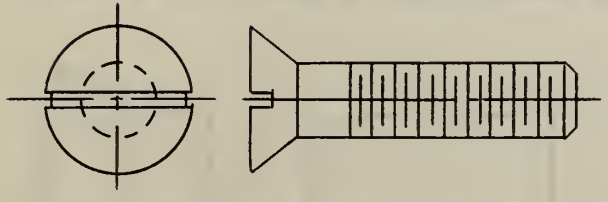

A. stud
B. fillister screw
C. tapered head bolt
D. cap screw ( )

The above figure represents a

48.

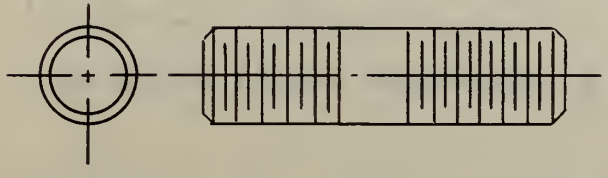

A. bolt
B. tapped rod
C. stud
D. safety set screw ( )

The above figure represents a

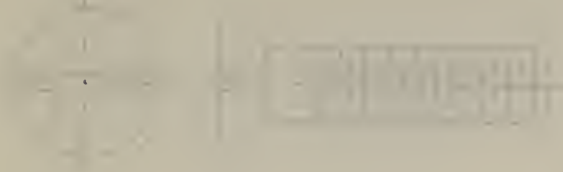

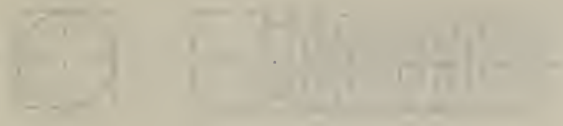

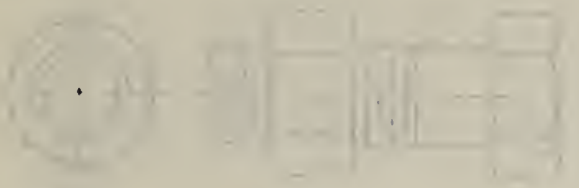

49.

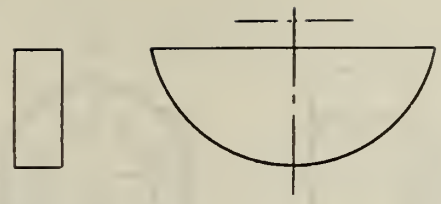

A. gibe key
B. woodruff key
C. half-moon key
D. square key ( )

The above figure represents a

50.

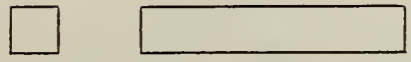

A. gibe key
B. spline key
C. finger key
D. square key ( )

The above figure represents a

51.

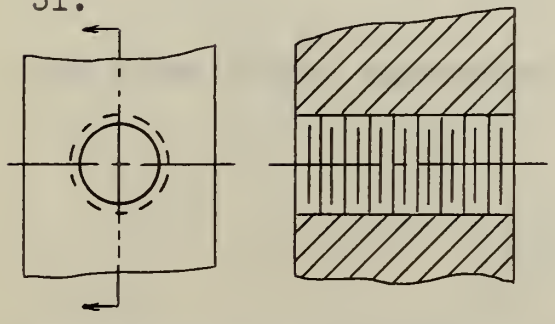

A. tapped hole with tap-drill hole showing
B. cored hole
C. hole with splines
D. tapped through hole ( )

The above figure represents a

52.

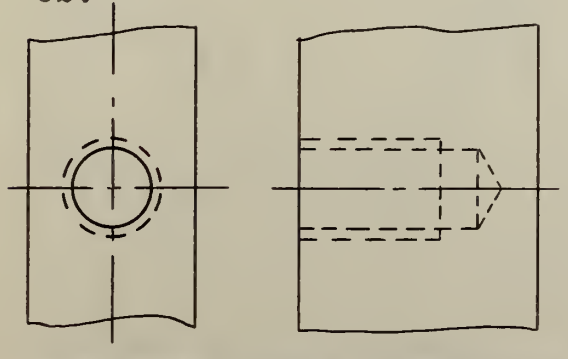

A. tapped hole with tap-drill hole showing
B. hole with splines
C. tapped hole with tap-drill hole not showing
D. reamed hole ( )

The above figure represents a

53.

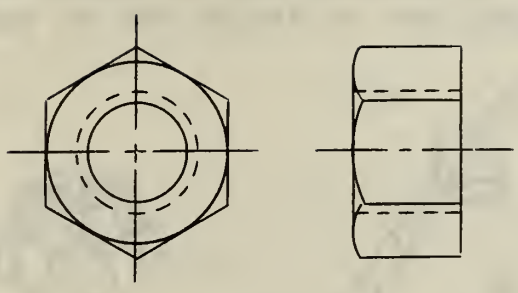

A. bolt head

B. hexagon nut set on the "corners"

C. square nut set on the "diagonals"

D. hexagon nut set on the "flats" ( )

The above figure represents a

54.

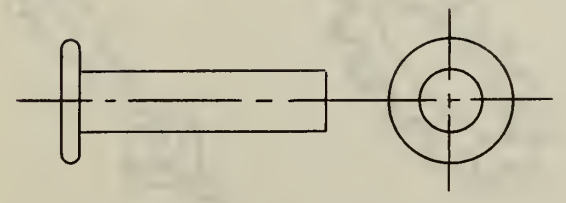

A. American standard flat rivet

B. boiler rivet

C. structural rivet

D. flat headed plug ( )

The above figure represents a

Directions: Identify each of the following objects by placing the number of the picture in the parentheses before the correct name of the object at the bottom of this sheet.

1.

2.

3.

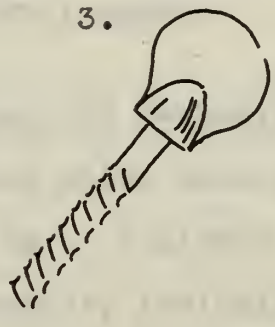

4.

5.

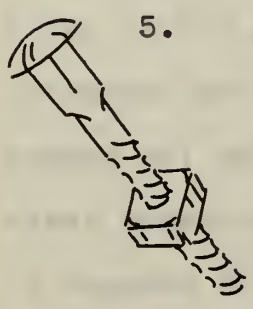

6.

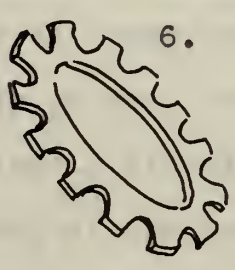

7.

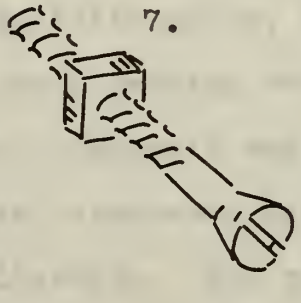

8.

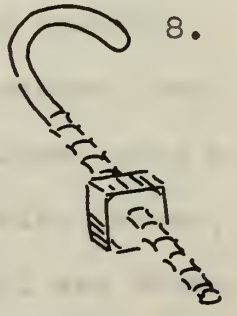

9.

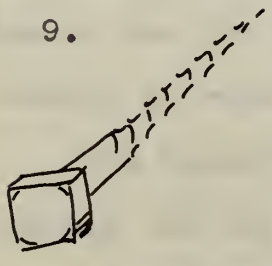

10.

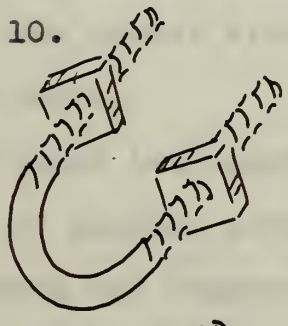

11.

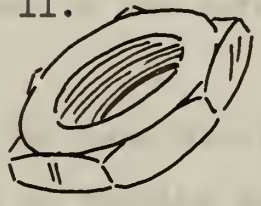

12.

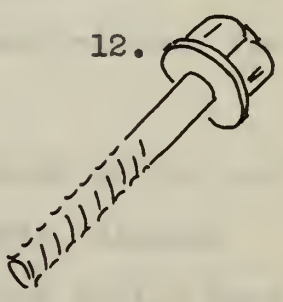

13.

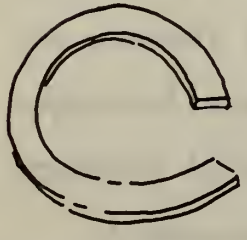

14.

15.

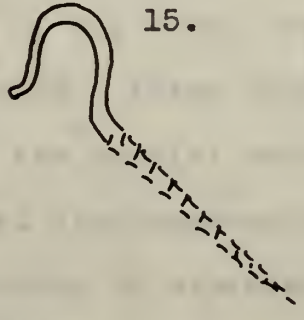

16.

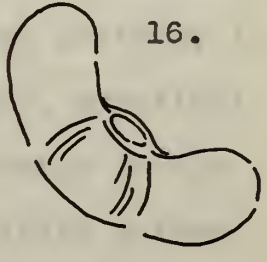

( )Screw hook. ( )Lag screw. ( )Jam nut. ( ) Wing nut.

( )Castle nut. ( )U-bolt. ( )Eye bolt. ( )Thumb screw.

( )Hook bolt. ( )Hanger bolt. ( )Collar screw. ( )Carriage bolt.

( )Shakeproof lock washer. ( )Stove bolt. ( )Lock washer. ( )Plain washer.

CHAPTER III

EVALUATION OF PUPIL GROWTH

Results of Teaching "Fasteners in Mechanical Drawing" by the Unit Method.--The introductory phase opened with an explanation of the classroom procedure to be followed throughout the study of the unit. A stapled booklet, including the core activities of the general study-and-activity guide, the special study-and-activity guides, and pupil reading references, was handed out and clearly discussed. Emphasis was placed upon a clear understanding of the special study-and-activity guides, in regards to mechanics and application. The pupil was shown how to use the code number system, in the core activities, for looking up references.

The second phase introduced the laboratory work of the unit. Through the use of machine parts as working models, display boards of fasteners and commercial blueprints, the pupils were lead into a discussion and study of the first core activity in the general study-and-activity guide. After study, practical application was brought about by the pupils' solution of the problems introduced in the special study-and-activity guides.

A programmed pooling-and-sharing of experiences phase followed the study of the core activities. This phase included reports from individuals on optional related activities and group discussion on problems developing around certain special study-and-activity guides. A class summary and short, pointed

demonstrations brought the unit to a close.

Estimating Pupil Growth.--A summary record of the teacher's observations of the students' work and work habits was kept during the teaching of the unit. Definite progress was evidenced through the experience of planning their own work to fit their own needs, budgeting their own time, selecting optional related activities and interest in the special study-and-activity guide drawing problems. The new system, through its continuity, appealed to them from the start. The problems were definite and could be correlated to their own shop area. This new interest was shown through selection of optional related activities that related or directly applied to their shop program. With the problems and core activities before them, the advanced pupil could arrange his own program of work and the slower pupil, with more teacher aid time available, could cover more activities.

The summary record showed that the unit brought out better understandings between teacher and pupil. There was a greater freedom for each pupil to express his individual opinion thus stimulating each pupil to do better work. The core activities of the general study-and-activity guide showed increased quality of work over former class assignments. Perhaps this was due to an interest in the presentation of the problems or because an attempt was made to have the work apply to their own shop work. The optional related activities were new and were received with varied opinions. Due to the fact that no homework or class assignments were required before, the optional related activities

were stimulating to some pupils and obstacles to others. The organization and method of presentation of the special study-and-activity guides were received with greater interest and better understanding when compared with the past problem-plate method. The pupils could better understand the relation of one drawing problem with the next as he studied the core activities.

Comparison of the initial scores of the pre-test and the scores of the final test, indicates either a gain or marked improvement for each pupil after the study of the unit. Table 2, page 65, shows that all made fewer errors in the final test. The pupils with the five lowest scores on the pre-test, gained from 22 to 64 points in the final test. The five pupils who gained the highest in the pre-test, advanced from 5 to 33 points in the final test. Thus the educative growth that took place during the study of the unit is evidenced in a comparison of the scores before teaching, column (2) and the scores after teaching the unit, column (3) of Table 2.

The calculations of the mean and standard deviation of both pre-test scores and final test scores are shown in Tables 3 and 4, pages 66 and 67. It will be noted that the mean obtained from the pre-test scores was increased by 32 points over the calculated mean of the final test scores.

Tables 5 and 6, pages 69 and 70, graphically illustrate the relative growth of the class in the pre-test and final test. Each relative growth scale shows the mean, standard deviation and distribution of pupil growth in each test. A comparison of the two scores will further indicate the learning

Table 2. Initial Score, Final Score, and Gains Made by Each Pupil on Test.

Pupil	Initial Score	Final Score	Points Gained
(1)	(2)	(3)	(4)
A	41	69	28
B	45	50	5
C	44	67	23
D	15	57	42
E	52	70	18
F	29	81	52
G	20	64	44
H	39	70	31
I	14	65	51
J	65	80	15
K	62	70	8
L	18	40	22
M	6	70	64
N	33	48	15
O	38	75	37
P	29	64	36
Q	39	75	36
R	52	78	26
S	13	49	36
T	35	63	28
U	39	84	45
V	52	85	33

Table 3. Calculation of the Mean and Standard Deviation for the Grouped Frequency Distribution of Pre-Test Scores[a]

Raw Scores in class intervals of five	F	D	FD	FD^2
(1)	(2)	(3)	(4)	(5)
61-65	2	-5	-10	50
56-60	0	-4	0	0
51-55	3	-3	- 9	27
46-50	0	-2	0	0
41-45	3	-1	- 3	3
36-40	4			
31-35	2	-1	- 2	2
26-30	2	-2	- 4	8
21-25	0	-3	0	0
16-20	2	-4	- 8	32
11-15	3	-5	-15	75
6-10	1	-6	- 6	36
Totals	22		-13	233

Assumed mean 38.0

True Mean 38.0 - (-13 ÷ 22) x 5

38.0 - 2.95

True Mean 35.05

Standard Deviation $\sqrt{\frac{233}{22} - \left(\frac{-13}{22}\right)^2} \times 5$

$\sqrt{10.59 - (0.349)} \times 5$

$\sqrt{10.241} \times 5$

Standard Deviation 16

[a] Roy O. Billett, Fundamentals of Secondary-School Teaching, Boston, Houghton Mifflin Company, 1940, pp. 631-633.

Table 4. Calculation of the Mean and Standard Deviation for the Grouped Frequency Distribution of Final Test Scores[a]

Raw Scores in class intervals of three	F	D	FD	FD^2
(1)	(2)	(3)	(4)	(5)
84-86	2	- 5	-10	-50
81-83	1	- 4	- 4	-16
78-80	2	- 3	- 6	-18
75-77	2	- 2	- 4	- 8
72-74	0	- 1	0	0
69-71	5			
66-68	1	- 1	- 1	- 1
63-65	4	- 2	- 8	-16
60-62	0	- 3	0	0
57-59	1	- 4	- 4	-16
54-56	0	- 5	0	0
51-53	0	- 6	0	0
48-50	3	- 7	-21	-147
45-47	0	- 8	0	0
42-44	0	- 9	0	0
39-41	1	-10	-10	-100
Totals	22		-20	372

Assumed mean 70.0

True Mean $70.0 - (-20 \div 22) \times 3$

$70.0 - 2.727$

True Mean 67.273

Standard Deviation $\sqrt{\frac{372}{22} - \left(\frac{-20}{22}\right)^2} \times 3$

$\sqrt{16.909 - (0.820)} \times 3$

$\sqrt{16.089} \times 3$

Standard Deviation 12.03

[a]Roy O. Billett, Fundamentals of Secondary School Teaching, Boston, Houghton Mifflin Company, 1940, pp. 631-633.

that actually took place.

Another measurement of the educative growth of each pupil is shown in Table 7, page 71. The total scores of each drawing completed by the pupil is compared with his final test mark. An objective rating scale, of ten items, was set up on each drawing problem in the unit. The rating scale items were based on the material covered by the special study-and-activity guides and the standards of a good drawing as set up by the teacher. Several sample rating scales are shown in the Appendix, page 82. Out of a possible 170 points, the highest score achieved was 117 points. The lowest score was 19 points. In this heterogeneous class, the superior pupil could cover the regular and additional problems, while the slower pupil, because of class standards, failed to successfully complete the basic problems. Another factor in the high drawing scores can be based upon the ability of some pupils to attain higher standards of mechanical skill in drawing and a better interpretation of blueprint reading. The final test score included all these areas of study plus an understanding of the core and optional related activities. Thus pupils with low mechanical drawing skill gained in the final test score through a study of these activities.

The graph on page 72 illustrates the difference in range of pre-test scores and final test scores per pupil. The green line represents the pupils' scores, from low to high, in the pre-test. The red line represents the final test scores, not in low to high order, but in relation to the green line scores.

Table 5. Distribution of Pupil Growth of Pre-Test Scores

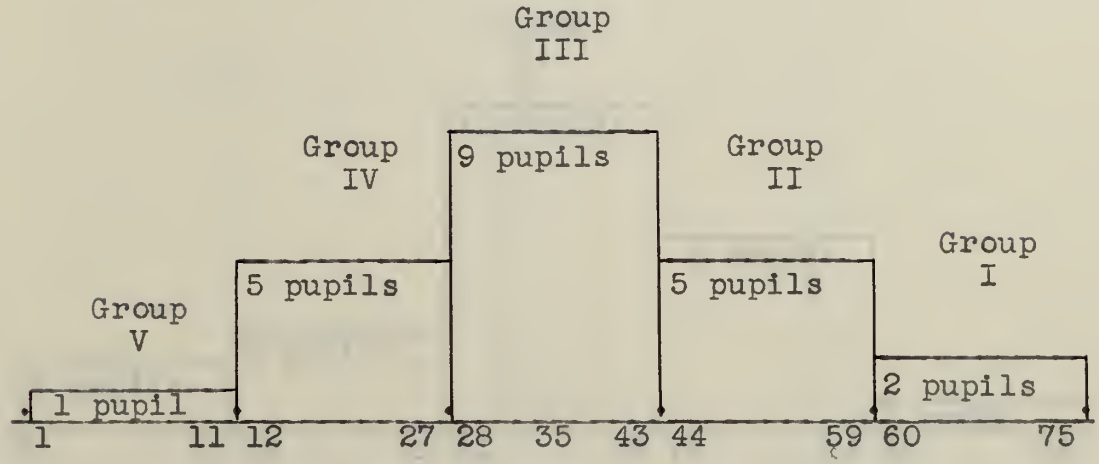

Relative Growth Scale

Table 6. Distribution of Pupil Growth of Final Test Scores

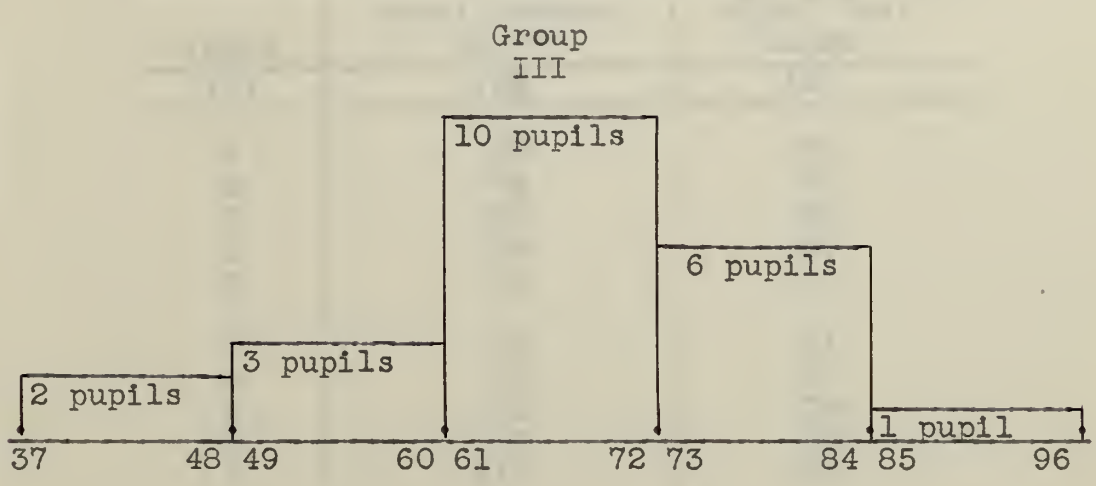

Relative Growth Scale

Table 7. Total Score on Drawings and Final Test Score of Each Pupil.

Pupil	Total Drawing Score	Final Test Score
(1)	(2)	(3)
A	35	69
B	34	50
C	87	67
D	59	57
E	78	70
F	56	81
G	33	64
H	33	70
I	47	65
J	112	80
K	117	70
L	45	40
M	88	70
N	51	48
O	64	75
P	77	64
Q	72	75
R	34	78
S	19	49
T	38	63
U	78	84
V	74	85

Graph 1. Difference in Range of Pre-Test Scores and Final Test Scores

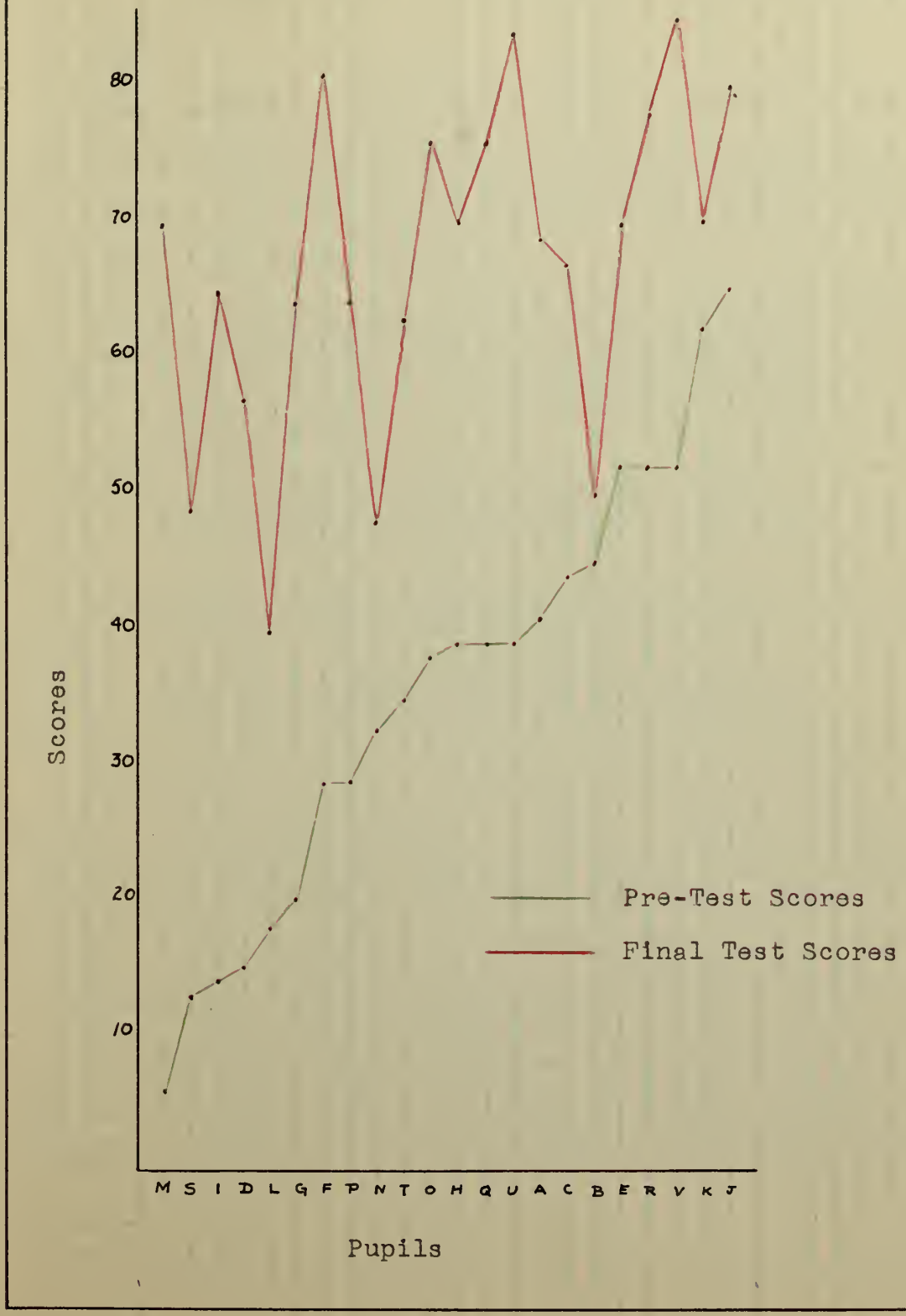

The lowest score of the final test shows an increase of 34 points over the lowest score of the pre-test. The highest score of the final test leads the highest score of the pre-test by 20 points.

Pupil Appraisal of the Unit.--The following questions were answered by the pupils in Part I of a brief inquiry form.[1] The pupils placed a circle around the YES or NO, but as a summary, I will place the total scores.

	YES	NO
1. Do you prefer the new method of conducting classroom activities to the previous way?	19	3
2. Do you think it is an improvement over the former method?	21	1
3. Do you think it gives the teacher more time to help and understand your problems and interests about the unit?	22	0
4. Do you find the discussion periods of definite help in the study of the unit? .	15	7
5. Have you a better understanding of the topic as studied by this method when compared with the method used before in class?	20	2

In general, the class approved of the unit method of teaching over the previous method. Of Part I, question four showed more of a negative answer than the other four. Their answer was based upon the pooling and sharing phase, and to these few, as will be noted later in a discussion of Part II, they called it, "time taken from their drawing." Part II of the inquiry form, covered their likes, dislikes, interests, difficulties and personal suggestions. The likes were based on the newness of

---

[1]A complete "Pupil Appraisal of Unit" inquiry form is shown in the Appendix, page .

the unit idea, the practical problems introduced that pertained to the shop work, and the idea of optional related activities outside the classroom. The dislikes were few, but centered around lost time for drawing or the idea of doing extra work to stay with the group.

Interest was shown in their acceptance and approval of the presentation of the special study-and-activity guides and core activities in booklet form. Many called the optional related activities, "fun". The difficulties and future suggestions, falling into the same grouping, emphasized the length of the unit in relation to the work that had to be covered. Some pupils said there was too much to cover in that they had to pass over some activity too fast to really get all they wanted out of it. Others disliked the pooling and sharing of experiences. In most cases the dislike was based upon the standing before the class and talking.

Teacher Appraisal of the Unit.--Certain points and problems have prominently impressed the writer as he has taught and watched the unit develop in the classroom. These points are discussed under their respective headings.

A. General Study-and-Activity Guide.

1. After the introductory phase of the unit, the teacher did not give enough specific help in bridging the gap between the beginning phase and the laboratory phase. Many pupils started the core activities on the wrong foot, thus not understanding how to use the material of the core

activity with the special study-and-activity guide drawing plates.

2. Even with the use of several different reference books, there is need for a good textbook as a basis of all reference work. When reference books are difficult to obtain, as it was in this unit, many pupils lacked the reading material at the time needed.

B. The format and presentation of the special study-and-activity guide with the core activities typed on the opposite pages was very successful.

C. Optional Related Activities.

1. The teacher did not give the pupils enough specific help in the study of the optional related activities. The related activities were handed out in the proper place and manner, but a definite method of constant checking had to be developed to see that they did not get lost in the pupil's mind.

2. With practically all of the pupils who did optional related activities, the students finished their core activities first. Therefore the problem will be to develop the core activities so the optional related activities may be started sooner. The pupils who do the optional related activities earlier will get more out of the unit.

3. Future optional related activities should be related not only to the pupils' shopwork, but to

their out of school interests and hobbies.

D. Classroom Presentation

1. The building of display boards on various types of fasteners by the pupils created continuous student interest.

2. There is a definite need for obtaining good visual aids, like motion picture and film strips on fasteners, for classroom presentation.

APPENDIX

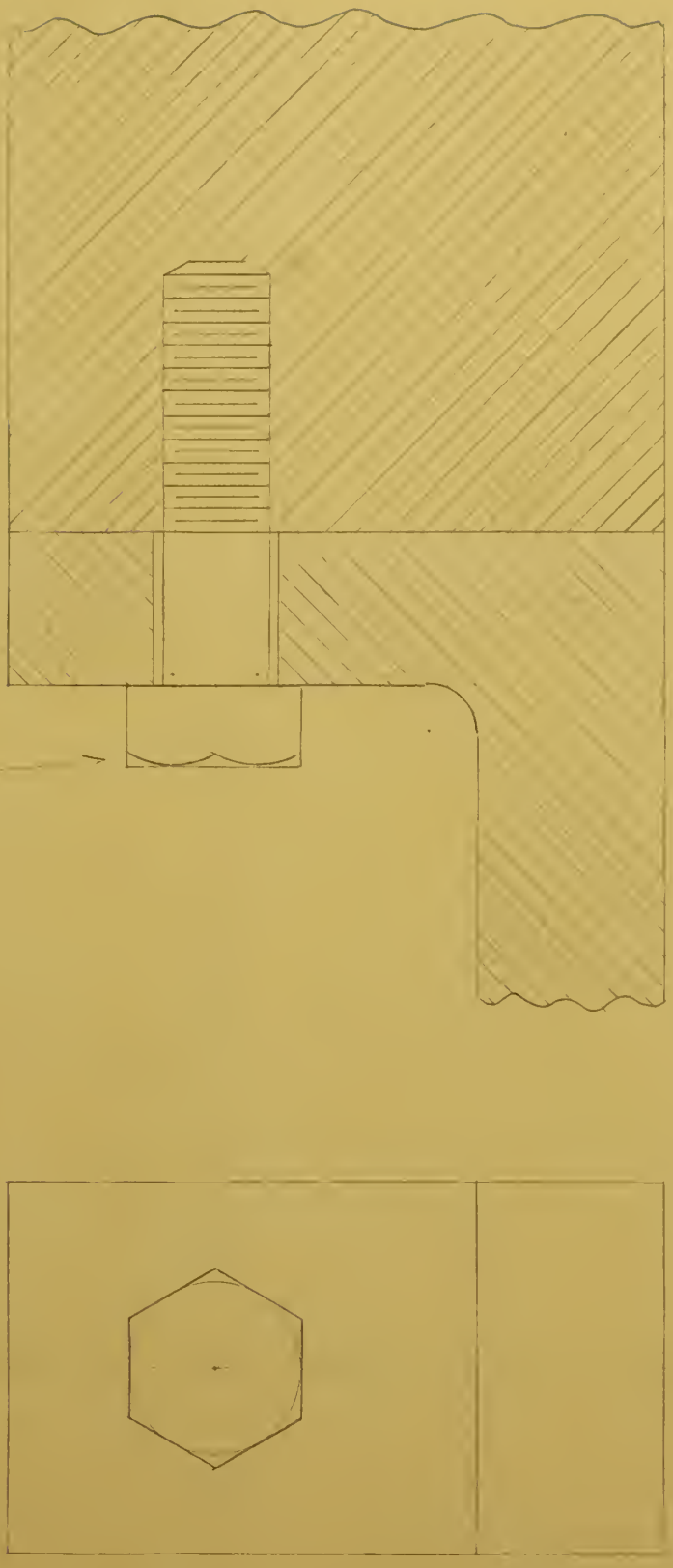

Pupil Appraisal of the Unit

Part I

Read the following questions and indicate your answer by drawing a circle around the word YES, or the word NO.

1. Do you prefer the new method of conducting classroom activities to the previous way? YES NO

2. Do you think it is an improvement over the former method? . . . . . YES NO

3. Do you think it gives the teacher more time to help and understand your problems and interests about the unit? . . . . . YES NO

4. Do you find the discussion periods of definite help in the study of the unit? . YES NO

5. Have you a better understanding of the topic as studied by this method when compared with the method used before in class? . . . . . YES NO

Part II

Give a brief answer to the following questions:

1. What do you like most in the new method?

2. What do you dislike about the new method?

3. Tell why you found it more interesting, or less interesting.

4. What difficulties have you encountered?

5. What suggestions can you give to make the new method better or more helpful to you and future classes?

TEST ANSWER SHEET

1. (F)
2. (T)
3. (T)
4. (T)
5. (T)
6. (F)
7. (F)
8. (T)
9. (T)
10. (T)
11. (T)
12. (T)
13. (T)
14. (F)
15. (T)
16. (T)
17. (T)
18. (T)
19. (T)
20. (T)
21. (T)
22. (T)
23. (1)
24. (1)
25. (4)
26. (2)
27. (2)
28. (3)
29. (3)
30. (2)
31. (2)
32. (2)
33. Diameter
Threads per inch
National Fine
Class Fit
34. Diameter
Length
Hexagon Head
Diameter
Threads per inch
National Coarse
Class Fit
35. (E)
(C)
(B)
(A)
(G)
36. (F)
(A)
(D)
(C)
(B)
(E)
(B)
37. (A)
(D)
(B)
(E)
38. (A)
(B)
(C)
(D)
(A)
(B)
(D)
(C)
39. (A)
40. (A)
41. (C)
42. (D)
43. (C)
44. (B)
45. (B)
46. (A)
47. (D)
48. (C)
49. (B)
50. (D)
51. (D)
52. (A)
53. (B)
54. (A)
55. (15)
(1)
(8)
(6)
(9)
(10)
(2)
(7)
(11)
(14)
(12)
(13)
(16)
(3)
(5)
(4)

DRAWING SCORE SHEET

Problem No. 208

	Check Items	Points
1.	Quality of lettering	1
2.	Spacing of problem on paper	1
3.	Line texture of drawing	1
4.	Appearance of completed drawing	1
5.	Correct and complete bolt specification	1
6.	Correct size of Hexagon Bolt head	1
7.	Correct size of Hexagon Nut	1
8.	Correct bolt symbol in sectional view	1
9.	Correct bolt symbol in full view	1
10.	Section line in side view	1
		Total 10

Problem No. 211

	Check Items	Points
1.	Quality of lettering	1
2.	Spacing of problem on paper	1
3.	Line texture of drawing	1
4.	Appearance of completed drawing	1
5.	Correct left side view	1
6.	Section line in left side view	1
7.	Correct size and construction of the Hexagon Cap Screw	2
8.	Correct measurement of X and space left for body of Cap Screw	1
9.	Correct and complete Cap Screw specification	1
		Total 10

BOSTON UNIVERSITY
1 1719 02562 6492

Date Due

DEC 1 1		JUL 29 1953	
FEB 2 8 1950		JAN 2 0 1954	
APR 1 3 1950		APR 2 1 1954	
APR 2 1950		APR 2 8 1954	
APR 3 1950		MAY 6 1954	
MAY 1950		DEC 1 4 1954	
MAY 1 8 1950		JAN 3 1955	
MAY 2 0 1950		JAN 1 0 1955	
APR 4 1951		FEB 1 2 1955	
AUG 1 5 1951		APR 5 1955	
OCT 2 3 1951		AUG 6 1956	
APR 2 6 1952			
MAY 3 1952			
MAY 1 0 1952			
JUN 1 4 1952			

Library Bureau Cat. No. 1137

stored Service Paper
Edmond, H.E.
1949
Edmond, H.E.
Unit organization of the topic, fasteners in mechanical drawing.

Ed.
Service Paper
Edmond, H.E.
1949
stored